Comfort-Aire® Century®

SPECIFICATIONS

- High efficiency lanced fin design
- R-32, R454B, AC & Heat Pump compatible with Refrigerant Detection System
- All coils have durable packaging with bar coded labels on the box
- Threaded expansion valves available factory installed or as a field installed kit
- Factory installed Refrigerant Detection Sensor Bracket
- Coils are air pressure tested at 500 psi, leak tested with helium, sealed with rubber plugs, then charged with dry air
- Downflow drip shields are molded into drain pan
- Down-turned headers are sized out to easily receive line set
- Includes die-cut foam sheet for sealing, drain ELL, drain hose & clamp
- Dedicated upflow/downflow
- Copper refrigerant connections for easy brazing
- Rifled copper tubing

R-32 Pistons	
MBTUH	Size
18	41
24	46
30	53
36	57
42	62
48	65
60	76

R-454B Pistons	
MBTUH	Size
18	46
24	53
30	59
36	65
42	70
48	76
60	84

Line-Set Connection Size

1-1/2 - 3 Ton 3/8" x 3/4"
3-1/2 - 5 Ton 3/8" x 7/8"

CMH SERIES

MANUFACTURED HOUSING COILS



Representative drawing only.
Some models may vary in appearance.

AHRI CERTIFIED™ www.ahridirectory.org

Intertek

Warranty–6 years on parts
(Some limitations apply; see printed warranty for details.)

www.comfort-aire.com • www.century-hvac.com

R454B

MODEL NUMBER GUIDE

C MH 18 P M 1 M L

Coil Type
C = Uncased Vertical

Application
MH = Mobile Home

Nominal Tonnage BTUH
18 = 1.5 ton
1824 = 1.5 - 2 ton
24 = 2 ton
2430 = 2 - 2.5 ton
30 = 2.5 ton
3036 = 2.5 - 3 ton
36 = 3 ton
42 = 3.5 ton
4248 = 3.5 - 4 ton
48 = 4 ton
4860 = 4 - 5 ton
60 = 5 ton

Refrigerant Type & Metering Device
P = Piston (R-454B)
A = R-454B Non-bleed HP-A/C TXV
B = R-32 Non-bleed HP-A/C TXV
T = R-410A Non-bleed HP-AC TXV

Width
M = 18"

Coil Code

Series

Refrigerant Detection System
R = RDS Controller & Sensor (Factory Installed)
L = Leak Detection Sensor (Factory installed)
S = R410A Service Coil (Replacement only)

Please Note:

The R Series coils include RDS mitigation board and sensor. Recommended for use with non-LE Series indoor units.

The L Series coils include the RDS sensor only and are intended for use with LE Series indoor units.

The S Series coils are R410A replacement coils only and many not be used for new installations or be eligible for new ratings. (Equipped with 410A piston).

If an L Series coil is used with a non-A2L compliant furnace OR a non-LE Series furnace, a mitigation board (p/n 27A05) will need to be installed in the furnace.

Coil Model	R454B Installed Piston Size	Dimensions		
		Pan Width (W)	Pan Depth (D)	Coil Height (H)
CMH18/24PM3M	53	18"	19-1/2"	17"
CMH18/36PM1M	65	18"	19-1/2"	17"
CMH24/30PM1M	59	18"	19-1/2"	19"
CMH36PM2M	65	18"	19-1/2"	19"
CMH36PM3M	65	18"	19-1/2"	15"
CMH42/48PM1M	76	18"	19-1/2"	19"
CMH42/48PM2M	76	18"	19-1/2"	19"
CMH42/60PM3M	84	18"	19-1/2"	19"
CMH48/60PM1M	84	18"	19-1/2"	25"
CMH48/60PM2M	84	18"	19-1/2"	23"
CMH48PM2M	76	18"	19-1/2"	21"
CMH18/24AM3M	53	18"	19-1/2"	11"
CMH18/36AM1M	65	18"	19-1/2"	17"
CMH24/30AM1M	59	18"	19-1/2"	19"
CMH36AM2M	65	18"	19-1/2"	19"
CMH36AM3M	65	18"	19-1/2"	15"
CMH42/48AM1M	76	18"	19-1/2"	19"
CMH42/48AM2M	76	18"	19-1/2"	19"
CMH42/60AM3M	84	18"	19-1/2"	19"
CMH48/60AM1M	84	18"	19-1/2"	25"
CMH48/60AM2M	84	18"	19-1/2"	23"
CMH48AM2M	76	18"	19-1/2"	21"

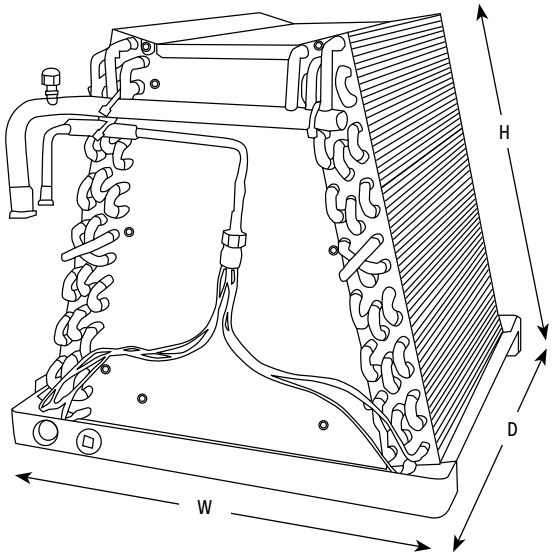

"This product complies with all California product labeling laws including, but not limited to, the Safe Drinking Water and Toxic Enforcement Act of 1986, more commonly known as Proposition 65."

Due to ongoing product improvements, specifications and dimensions are subject to change and correction without notice or incurring obligations. Determining the application and suitability for use of any product is the responsibility of the installer. Additionally, the installer is responsible for verifying dimensional data on the actual product prior to beginning any installation preparations. Third party incentive and rebate programs have precise requirements as to product performance and certification. All products meet applicable regulations in effect on date of manufacture; however, certifications are not necessarily granted for the life of a product. Therefore, it is the responsibility of the applicant to determine whether a specific model qualifies for these incentive/rebate programs.

1900 Wellworth Ave., Jackson MI 49203 • 517.787.2100
www.heatcontroller.com • www.comfort-aire.com • www.century-hvac.com

HEAT CONTROLLER
Confidence in any climate
Comfort-Aire Century