LE Series

SPECIFICATIONS

Installation Features
- Left or right utility connections
- Removable floor base for bottom return air
- Zero step horizontal conversion

Configurations
- Upflow / Horizontal

Heat Exchanger Design
- Aluminized steel tubular heat exchanger

Burners
- Aluminized steel inshot burners for smooth ignition

Cabinet Design
- Compact 33″ height
- Standardized widths for easy coil fit

Air Delivery System
- Multi-speed high efficiency (constant torque) blower motor
- Easily removable slide out blower design
- Enhanced cooling SEER ratings when applied with properly matched cooling equipment

Controls
- Single stage gas valve
- Durable silicon nitride ignitor
- Self diagnostics saving last 10 fault codes regardlesss of power interruption
- Control features electronic air cleaner and humidifier terminals

Venting
- Rotatable draft inducer for venting flexibility

GUH80X

SINGLE STAGE CONSTANT TORQUE ULTRA LOW NOX GAS FURNACE

80% AFUE



AHRI CERTIFIED™ www.ahridirectory.org

DESIGN CERTIFIED

California Only
This furnace does not meet the South Coast Air Quality Management District (SCAQMD) Rule 1111 and San Joaquin Valley Air Pollution Control District (SJVAPCD) Rule 4905 NOx emission limit (14 ng/J) and cannot be installed within the SCAQMD or SJVAPCD and Bay Area.

Warranty–6 years on parts, 20 years on heat exchanger
Ext. Warranty–12 years on parts, lifetime on heat exchanger
(Some limitations apply; see printed warranty for details.)
www.century-hvac.com

R-410A

MODEL NUMBER GUIDE

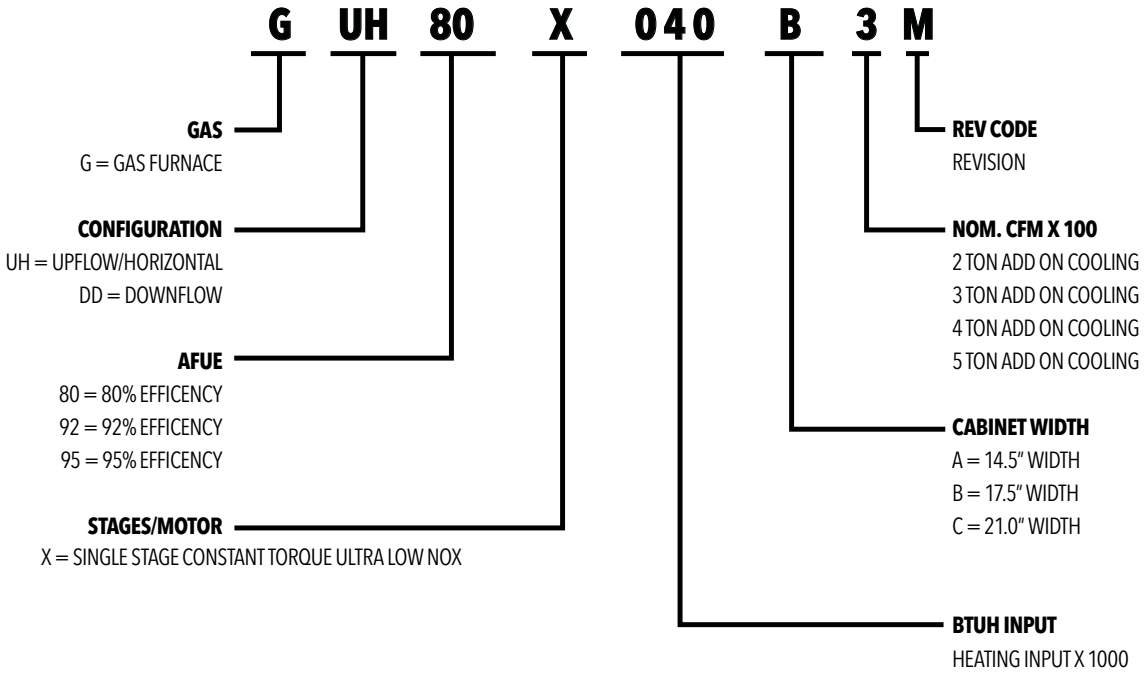

PHYSICAL AND ELECTRICAL DATA

	Model	Input (Btuh)	Output (Btuh)	AFUE (ICS)	Nom. Cooling Capacity	Gas Inlet (in.)	Volts/ Hz/ Phase	Max. Time Delay Breakeror Fuse	Nominal F.L.A.	Trans. (V.A.)	Approx. Shipping Weight (lbs.)
UPFLOW / HORIZONTAL	GUH80X040A3M	40,000	33,000	80%	3 Ton	1/2	120-60-1	15	6.8	40	119
	GUH80X060A3M	60,000	48,000	80%	3 Ton	1/2	120-60-1	15	6.8	40	119
	GUH80X080B4M	80,000	64,000	80%	4 Ton	1/2	120-60-1	15	8.4	40	140
	GUH80X100C5M	100,000	80,000	80%	5 Ton	1/2	120-60-1	15	10.9	40	157

Note: For vent sizing and clearances to combustibles, please reference installation instructions.

BLOWER PERFORMANCE DATA - GUH80X100C5M

External Static Pressure in. w.g.	Air Volume / Watts at Different Blower Speeds																			
	Bottom Return Air, Side Return Air with Optional Return Air Base, Return Air from Both Sides or Return Air from Bottom and One Side.										Single Side Return Air – Air volumes in bold require field fabricated transition to accommodate 20 x 25 x 1 in. air filter in order to maintain proper air velocity.									
	High		Med-High		Medium		Med-Low		Low		High		Med-High		Medium		Med-Low		Low	
	cfm	Watts	cfm	Watts	cfm	Watts	cfm	Watts	cfm	Watts	cfm	Watts	cfm	Watts	cfm	Watts	cfm	Watts	cfm	Watts
0.10	2216	637	1961	438	1707	305	1576	245	1457	193	**2245**	**633**	**1980**	**427**	1763	299	1592	240	1486	194
0.20	2165	663	1921	460	1667	324	1515	255	1323	190	**2200**	**652**	**1931**	**454**	1685	323	1533	253	1343	189
0.30	2129	684	1853	486	1624	344	1460	275	1262	208	**2147**	**678**	**1876**	**474**	1640	343	1470	273	1276	205
0.40	2060	710	1818	508	1559	365	1401	294	1193	222	**2110**	**702**	**1815**	**491**	1574	358	1424	292	1198	219
0.50	2030	726	1775	526	1515	380	1346	317	1134	238	**2064**	**725**	1777	516	1525	375	1360	312	1134	236
0.60	1985	749	1707	547	1453	401	1312	332	1080	252	**2025**	**744**	1726	533	1476	398	1311	330	1083	253
0.70	1931	769	1662	567	1405	419	1238	346	1012	269	**1973**	**765**	1673	558	1417	420	1243	344	1025	268
0.80	1882	789	1617	586	1364	438	1190	364	946	278	**1925**	**788**	1636	577	1372	436	1193	361	955	277
0.90	1832	807	1565	606	1317	457	1135	381	893	294	**1883**	**806**	1575	597	1312	457	1148	378	908	293
1.00	1727	772	1533	623	1244	468	1059	397	823	304	1785	789	1531	616	1263	469	1089	390	838	301

BLOWER PERFORMANCE DATA

Model	External Static Pressure in. w.g.	Air Volume / Watts at Various Blower Speeds									
		High		Medium-High		Medium		Medium-Low		Low	
		cfm	Watts	cfm	Watts	cfm	Watts	cfm	Watts	cfm	Watts
GUH80X040A3M	0.10	1389	251	1146	156	1007	111	963	98	945	94
	0.20	1355	267	1098	171	935	115	826	89	789	79
	0.30	1315	280	1068	184	881	126	768	97	646	75
	0.40	1278	287	1022	194	837	133	709	108	593	84
	0.50	1247	303	978	203	782	144	646	116	529	92
	0.60	1199	317	948	216	719	151	602	126	471	102
	0.70	1176	328	899	228	679	163	537	131	422	106
	0.80	1128	344	860	235	627	172	500	141	382	115
	0.90	1075	347	821	246	577	179	454	146	320	118
	1.00	966	322	771	256	546	188	416	154	292	121
GUH80X060A3M	0.10	1389	251	1146	156	1007	111	963	98	945	94
	0.20	1355	267	1098	171	935	115	826	89	789	79
	0.30	1315	280	1068	184	881	126	768	97	646	75
	0.40	1278	287	1022	194	837	133	709	108	593	84
	0.50	1247	303	978	203	782	144	646	116	529	92
	0.60	1199	317	948	216	719	151	602	126	471	102
	0.70	1176	328	899	228	679	163	537	131	422	106
	0.80	1128	344	860	235	627	172	500	141	382	115
	0.90	1075	347	821	246	577	179	454	146	320	118
	1.00	966	322	771	256	546	188	416	154	292	121
GUH80X080B4M	0.10	1828	419	1640	297	1503	238	1440	209	1240	147
	0.20	1775	438	1571	318	1446	255	1385	229	1187	159
	0.30	1727	457	1515	335	1393	275	1323	244	1110	173
	0.40	1676	473	1477	349	1340	292	1263	259	1058	190
	0.50	1632	490	1422	376	1290	309	1200	276	991	201
	0.60	1575	509	1370	391	1227	326	1154	290	922	218
	0.70	1502	507	1309	407	1171	343	1092	305	869	232
	0.80	1335	460	1267	422	1114	357	1043	320	804	243
	0.90	1115	395	1091	381	1047	367	984	334	735	255
	1.00	829	310	845	322	846	318	858	321	669	266

Century®

DIMENSIONS (IN.)

Model	A	B	C	D
GUH80X040A3M	14-1/2	13-3/8	13	4-3/4
GUH80X060A3M	14-1/2	13-3/8	13	4-3/4
GUH80X080B4M	17-1/2	16-3/8	16	6-1/4
GUH80X100C5M	21	19-7/8	19-1/2	8

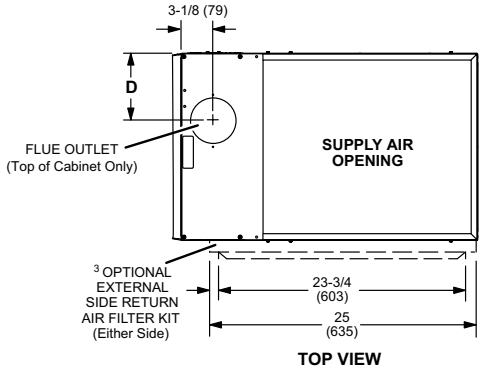

TOP VIEW

ACCESSORY LIST

Catalog Number	Description
External Filter Rack kits	
1.841018	1 Pack (16x25)
1.841039	10 Pack (16x25)
Return Air Base	
68W61	14.5", A Width
68W62	17.5", B Width
68W63	21.0", C Width
Horizontal Suspension Kits	
51W10	80 & 90% Kit
2-Stage Compressor Relay Kit	
85W66	Blower Relay Kit
Twinning kit	
16W72	Constant Torque Gas Furnace Twinning Kit

Note: For vent sizing and clearances to combustibles, please reference installation instructions.
2-Stage Compressor Relay Kit 2-Stage Compressor Relay Kit

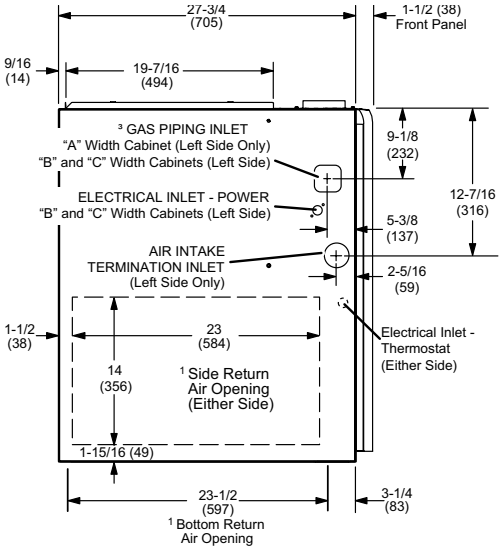

LEFT SIDE VIEW

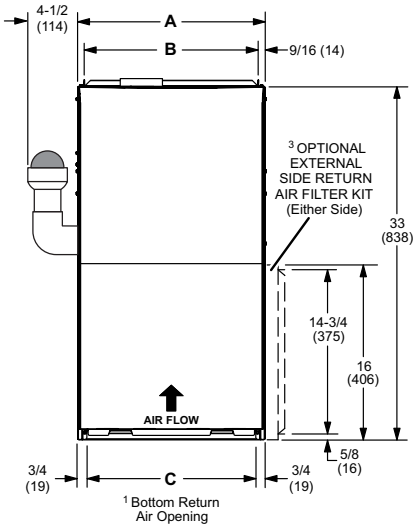

FRONT VIEW

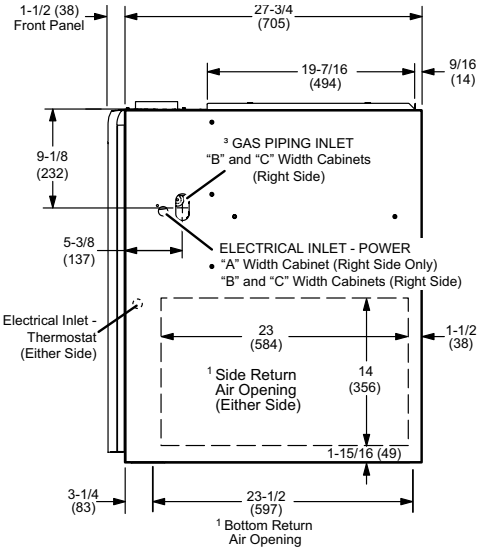

RIGHT SIDE VIEW

Due to ongoing product improvements, specifications and dimensions are subject to change and correction without notice or incurring obligations. Determining the application and suitability for use of any product is the responsibility of the installer. Additionally, the installer is responsible for verifying dimensional data on the actual product prior to beginning any installation preparations.
Third party incentive and rebate programs have precise requirements as to product performance and certification. All products meet applicable regulations in effect on date of manufacture; however, certifications are not necessarily granted for the life of a product. Therefore, it is the responsibility of the applicant to determine whether a specific model qualifies for these incentive/rebate programs.

"This product complies with all California product labeling laws including, but not limited to, the Safe Drinking Water and Toxic Enforcement Act of 1986, more commonly known as Proposition 65."

1900 Wellworth Ave., Jackson MI 49203 • 517.787.2100
www.heatcontroller.com • www.century-hvac.com

HEAT CONTROLLER
Confidence in any climate
Century