Century®

LE Series

HPA SERIES

HEAT PUMP PACKAGED UNIT

14 SEER/13.4 SEER2

SPECIFICATIONS

Refrigerant System

- Environmentally friendly R454B refrigerant
- Copper tubing with enhanced fin coils
- Internal service guage ports
- Sleeved distributor tubes
- Antimicrobial insulated drain pan
- High and Low Threaded pressure switches for system protection

Cabinet Construction

- Heavy-gauge galvanized steel base rails with rigging holes
- Rounded corners for safety and an attractive, clean appearance
- One piece base design for strength and stability
- Condensate and coil runoff drains to the perimeter of the unit
- Horizontal and downflow duct openings are flanged to minimize water entry
- Low profile, with compact footprint
- Insulation to minimize heat loss plus reduce sound
- Textured pre-painted steel cabinet finish
- Superior service access to components
- Louvered coil guard protection
- One piece "no leak" top design

Blower

- Insulated compartment to reduce sound
- Efficient constant torque motor for wide airflow range
- Slide out blower housing for easy service

Controls

- Solid state integrated blower control board with L.E.D self diagnostics
- Direct spark ignition
- Color coded wiring for easy service

Installation

- Horizontal or down discharge capable
- Horizontal and downflow duct covers provided with unit for installation flexibility
- Drain pan float switch monitors condensate level in drain pan and shuts down unit if drain becomes clogged
- Utility connections on "right side"
- Kits enable bottom gas and power entry through base pan
- Seismic Certification (with Seismic Strapping Kit applied): Latest Edition of International Building Code, California Building Code, and ASCE 7-16

Accessories

- Clip roof curbs and adjustable pitch roof curbs available
- Electric strip heat with optional single point power entry (side entry only)
- Internal Filter kits
- Duct Adapters
- Closure kit for base rail openings

Intertek

AHRI CERTIFIED™ www.ahridirectory.org Unitary Small AC AHRI Standard 210/240 Certification applies only when the complete system is listed with AHRI.

AHRI CERTIFIED™ www.ahridirectory.org Unitary Small AC AHRI Standard 210/240 Certification applies only when the complete system is listed with AHRI.

Warranty–Standard warranty or Extended warranty available with product registration.

See warranty document for details or visit;

www.century-hvac.com

R454B

HEAT CONTROLLER

MODEL NUMBER GUIDE

H	PA	24	S	1
Heat Pump	Package Unit	Cooling Capacity BTUH x1000	Standard Efficiency	Power 208/230-1-60

ELECTRICAL AND PHYSICAL DATA

Model	Voltage	Phase	Hz	Min Volts @ 60 hz	MCA	Max Fuse/ HACR Breaker	Compressor	Blower Motor		Condenser Motor		Refrig. Charge (oz.)	Weight (lbs.)
							RLA	FLA	HP	FLA	HP		
HPA24S1	208-230	1	60	195	17.5	25.0	10.9	2.8	1/3	1.0	1/6	81oz	369
HPA30S1					20.9	30.0	12.7	4.1	1/2	1.0	1/6	81 oz	379
HPA36S1					24.8	40.0	16.6	3.0	1/2	1.0	1/6	101 oz	388
HPA42S1					27.9	40.0	16.2	6.0	3/4	1.7	1/4	150 oz	460
HPA48S1					32.0	50.0	19.5	6.0	3/4	1.7	1/4	143 oz	464
HPA60S1					37.5	60.0	25.6	3.9	1	1.7	1/4	150 oz	503

PERFORMANCE

Model	COOLING				HEATING					Sound dBA
	Rated AHRI Capacity Btuh (SEER/ SEER2)	SEER/ EER	SEER2/ EER2	Rated Sensible Capacity Btuh SEER/SEER2	47 DEG.		HSPF / HSPF2	17 DEG.		
					BTUH (HSPF/ HSPF2)	COP (HSPF/ HSPF2)		BTUH (HSPF/ HSPF2)	COP (HSPF/ HSPF2)	
HPA24S1	22,600 / 23,000	14.0/11.0	13.4/10.6	17,800 / 18,100	22,000 / 21,600	3.8 / 3.4	8.0 / 6.7	12,300 / 11,900	2.3 / 1.9	78
HPA30S1	28,600 / 28,600			22,500 / 22,500	27,000 / 25,800	3.7 / 3.7		15,900 / 15,000	2.3 / 2.2	78
HPA36S1	34,000 / 34,000			26,800 / 26,800	32,400 / 32,600	3.7 / 3.6		20,000 / 18,300	2.3 / 2.1	78
HPA42S1	40,000 / 39,500			31,200 / 30,800	39,000 / 40,000	3.6 / 3.5		23,600 / 22,500	2.3 / 2.1	78
HPA48S1	46,000 / 45,500			35,800 / 35,400	45,000 / 47,000	3.7 / 3.6		27,000 / 28,200	2.3 / 2.3	79
HPA60S1	57,000 / 56,000			43,300 / 42,500	56,000 / 58,000	3.7 / 3.3		33,600 / 33,300	2.4 / 2.0	78

*Certified in accordance with Unitary Air Conditioner Certification Program, which is based on AHRI Standard 210/240

HEATING PERFORMANCE EXT. RATINGS

Model	Outdoor Temp. DB/WB deg. F											
	0/0		5/4		17/15		35/33		47/43		62/56	
	Btuh	KW	Btuh	KW	Btuh	KW	Btuh	KW	Btuh	KW	Btuh	KW
HPA24S1	7500.00	2.20	8900.00	2.61	12300.00	3.60	18500.00	5.42	22700.00	6.65	27900.00	8.18
HPA30S1	9100.00	2.67	11000.00	3.22	15400.00	4.51	22200.00	6.51	26800.00	7.85	32400.00	9.50
HPA36S1	11600.00	3.40	13900.00	4.07	19300.00	5.66	28100.00	8.24	33900.00	9.94	41200.00	12.07
HPA42S1	16500.00	4.84	19000.00	5.57	25100.00	7.36	35000.00	10.26	41700.00	12.22	50000.00	14.65
HPA48S1	14000.00	4.10	17500.00	5.13	25700.00	7.53	39100.00	11.46	48000.00	14.07	59100.00	17.32
HPA60S1	23400.00	6.86	26800.00	7.85	34900.00	10.23	49400.00	14.48	59100.00	17.32	71100.00	20.84

Note: Values based on 0.50" w.c. external static pressure

BLOWER PERFORMANCE

Model	Blower Tap	CFM @ext. Static Pressure in in. wc without filter, dry coil									
		0.1	0.2	0.3	0.4	0.5	0.6	0.7	0.8	0.9	1.0
HPA24S1	TAP 1	680	590	550	450	380	N/A	N/A	N/A	N/A	N/A
	TAP 2	890	830	800	760	710	680	640	600	N/A	N/A
	TAP 3	1000	965	930	900	870	835	805	770	740	695
HPA30S1	TAP 1	680	640	600	570	530	490	N/A	N/A	N/A	N/A
	TAP 2	1100	1070	1050	1020	990	960	930	900	N/A	N/A
	TAP 3	1195	1160	1130	1110	1070	1040	1005	970	935	875
HPA36S1	TAP 1	860	810	760	710	640	590	550	490	N/A	N/A
	TAP 2	1300	1265	1235	1200	1165	1125	1085	1040	1000	885
	TAP 3	1450	1425	1395	1350	1320	1285	1250	1165	1045	860
HPA42S1	TAP 1	800	720	640	550	475	390	310	0	0	0
	TAP 2	1470	1410	1360	1300	1260	1210	1155	1095	1000	940
	TAP 3	1580	1540	1505	1460	1415	1370	1320	1235	1135	1060
HPA48S1	TAP 1	1145	1075	1000	930	850	790	740	670	570	490
	TAP 2	1675	1630	1600	1540	1490	1440	1390	1300	1230	1125
	TAP 3	1840	1800	1760	1720	1670	1615	1555	1500	N/A	N/A
HPA60S1	TAP 1	1400	1320	1260	1200	1120	1060	980	900	N/A	N/A
	TAP 2	1920	1870	1820	1770	1720	1670	1450	1360	N/A	N/A
	TAP 3	1970	1915	1865	1820	1770	1725	1685	1640	1595	1540

ACCESSORY AIR RESISTANCE DATA - IN. W.G.

Air Volume cfm	Rectangular to Round Duct Adaptor Kits					
	Downflow		Horizontal			
	14 in. Diameter		14 in. Diameter		16 in. Diameter	18 in. Diameter
	24, 30, 36	42, 48, 60	24, 30, 36	42, 48, 60	42, 48, 60	42, 48, 60
500	0.03	- - -	0.04	- - -	- - -	- - -
600	0.05	- - -	0.07	- - -	- - -	- - -
700	0.08	0.13	0.08	0.13	- - -	- - -
800	0.10	0.17	0.12	0.16	- - -	- - -
900	0.12	0.21	0.15	0.21	- - -	- - -
1000	0.17	0.24	0.19	0.25	0.11	0.03
1100	0.18	0.30	0.23	0.30	0.11	0.03
1200	0.20	0.36	0.29	0.37	0.13	0.03
1300	0.26	0.43	0.31	0.43	0.17	0.03
1400	0.31	0.50	0.39	0.51	0.20	0.03
1500	- - -	0.57	- - -	0.57	0.21	0.05
1600	- - -	0.63	- - -	0.65	0.26	0.05
1700	- - -	0.71	- - -	0.72	0.30	0.06
1800	- - -	0.80	- - -	0.81	0.30	0.06
1900	- - -	0.91	- - -	0.90	0.40	0.06
2000	- - -	0.99	- - -	1.01	0.41	0.06

COOLING PERFORMANCE - EXTENDED RATINGS

Outdoor Model	Entering Wet Bulb Temp	Total Air Volume		Outdoor Temperature - DB °F																							
				85° F (29.4° C)						95° F (35° C)						105° F (40.6° C)						115° F (46.1° C)					
				Total Cooling Capacity		Compressor Motor Watts Input	Sensible To Total Ratio (S/T)			Total Cooling Capacity		Compressor Motor Watts Input	Sensible To Total Ratio (S/T)			Total Cooling Capacity		Compressor Motor Watts Input	Sensible To Total Ratio (S/T)			Total Cooling Capacity		Compressor Motor Watts Input	Sensible To Total Ratio (S/T)		
							Dry Bulb						Dry Bulb						Dry Bulb						Dry Bulb		
		cfm	L/s	kBtuh	kW		75°F 23.9°C	80°F 26.7°C	85°F 29.4°C	kBtuh	kW		75°F 23.9°C	80°F 26.7°C	85°F 29.4°C	kBtuh	kW		75°F 23.9°C	80°F 26.7°C	85°F 29.4°C	kBtuh	kW		75°F 23.9°C	80°F 26.7°C	85°F 29.4°C
HPA24S1	59°F (15°C)	700	330	23.2	6.8	1360	.96	1.00	1.00	22.2	6.5	1560	.99	1.00	1.00	21.4	6.3	1800	1.00	1.00	1.00	20.4	6.0	2060	1.00	1.00	1.00
		850	400	24.6	7.2	1360	1.00	1.00	1.00	23.6	6.9	1560	1.00	1.00	1.00	22.6	6.6	1790	1.00	1.00	1.00	21.6	6.3	2060	1.00	1.00	1.00
		1000	470	25.6	7.5	1360	1.00	1.00	1.00	24.6	7.2	1560	1.00	1.00	1.00	23.6	6.9	1790	1.00	1.00	1.00	22.4	6.6	2050	1.00	1.00	1.00
	63°F (17.2°C)	700	330	24.0	7.0	1360	.79	.93	1.00	22.8	6.7	1560	.81	.96	1.00	21.8	6.4	1800	.83	.98	1.00	20.4	6.0	2060	.86	1.00	1.00
		850	400	24.8	7.3	1360	.85	1.00	1.00	23.6	6.9	1560	.87	1.00	1.00	22.6	6.6	1790	.90	1.00	1.00	21.6	6.3	2060	.93	1.00	1.00
		1000	470	25.8	7.6	1360	.90	1.00	1.00	24.6	7.2	1560	.93	1.00	1.00	23.6	6.9	1790	.96	1.00	1.00	22.4	6.6	2050	.99	1.00	1.00
	67°F (19.4°C)	700	330	25.2	7.4	1360	.64	.77	.90	24.2	7.1	1560	.65	.79	.93	23.0	6.7	1790	.66	.81	.95	21.6	6.3	2060	.68	.84	.99
		850	400	26.2	7.7	1360	.67	.83	.98	25.0	7.3	1560	.69	.85	1.00	23.8	7.0	1790	.71	.88	1.00	22.4	6.6	2050	.72	.91	1.00
		1000	470	27.0	7.9	1360	.71	.88	1.00	25.8	7.6	1560	.73	.91	1.00	24.4	7.2	1790	.75	.94	1.00	23.0	6.7	2050	.77	.98	1.00
	71°F (21.7°C)	700	330	26.6	7.8	1360	.49	.63	.75	25.6	7.5	1560	.49	.64	.77	24.4	7.2	1790	.51	.65	.79	23.0	6.7	2050	.52	.67	.82
		850	400	27.8	8.1	1350	.51	.67	.81	26.6	7.8	1560	.52	.68	.83	25.2	7.4	1790	.53	.69	.86	23.8	7.0	2050	.55	.72	.89
		1000	470	28.6	8.4	1350	.54	.71	.87	27.2	8.0	1560	.54	.72	.90	25.8	7.6	1790	.56	.74	.93	24.4	7.2	2050	.58	.77	.96
HPA30S1	59°F (15°C)	850	400	28.0	8.2	1760	.96	1.00	1.00	27.0	7.9	1980	.99	1.00	1.00	25.6	7.5	2240	1.00	1.00	1.00	24.6	7.2	2540	1.00	1.00	1.00
		1050	495	30.0	8.8	1770	1.00	1.00	1.00	28.8	8.4	1990	1.00	1.00	1.00	27.4	8.0	2250	1.00	1.00	1.00	26.2	7.7	2550	1.00	1.00	1.00
		1250	590	31.4	9.2	1770	1.00	1.00	1.00	30.2	8.9	2000	1.00	1.00	1.00	29.0	8.5	2260	1.00	1.00	1.00	27.4	8.0	2560	1.00	1.00	1.00
	63°F (17.2°C)	850	400	28.6	8.4	1760	.79	.94	1.00	27.6	8.1	1990	.82	.96	1.00	26.2	7.7	2250	.84	.99	1.00	24.8	7.3	2540	.86	1.00	1.00
		1050	495	30.0	8.8	1770	.86	1.00	1.00	28.8	8.4	1990	.88	1.00	1.00	27.4	8.0	2250	.91	1.00	1.00	26.2	7.7	2550	.94	1.00	1.00
		1250	590	31.4	9.2	1770	.92	1.00	1.00	30.2	8.9	2000	.94	1.00	1.00	29.0	8.5	2260	.98	1.00	1.00	27.4	8.0	2560	1.00	1.00	1.00
	67°F (19.4°C)	850	400	30.6	9.0	1770	.65	.78	.91	29.4	8.6	2000	.66	.80	.93	27.8	8.1	2260	.67	.82	.96	26.2	7.7	2550	.69	.84	.99
		1050	495	32.0	9.4	1780	.69	.84	.99	30.4	8.9	2000	.70	.86	1.00	29.0	8.5	2260	.72	.89	1.00	27.4	8.0	2560	.74	.92	1.00
		1250	590	32.8	9.6	1780	.73	.90	1.00	31.2	9.1	2010	.75	.93	1.00	29.8	8.7	2270	.77	.96	1.00	28.0	8.2	2560	.80	1.00	1.00
	71°F (21.7°C)	850	400	32.6	9.6	1780	.50	.64	.76	31.2	9.1	2010	.51	.65	.78	29.6	8.7	2270	.52	.66	.80	28.0	8.2	2560	.53	.68	.83
		1050	495	34.0	10.0	1790	.53	.68	.82	32.4	9.5	2010	.54	.70	.85	30.8	9.0	2270	.55	.71	.87	29.0	8.5	2570	.57	.74	.91
		1250	590	35.0	10.3	1790	.56	.72	.89	33.4	9.8	2020	.57	.75	.92	31.6	9.3	2280	.58	.77	.95	29.8	8.7	2580	.60	.79	.98

COOLING PERFORMANCE - EXTENDED RATINGS

Outdoor Model	Entering Wet Bulb Temp	Total Air Volume		Outdoor Temperature - DB °F																							
				85° F (29.4° C)						95° F (35° C)						105° F (40.6° C)						115° F (46.1° C)					
				Total Cooling Capacity		Compressor Motor Watts Input	Sensible To Total Ratio (S/T)			Total Cooling Capacity		Compressor Motor Watts Input	Sensible To Total Ratio (S/T)			Total Cooling Capacity		Compressor Motor Watts Input	Sensible To Total Ratio (S/T)			Total Cooling Capacity		Compressor Motor Watts Input	Sensible To Total Ratio (S/T)		
							Dry Bulb						Dry Bulb						Dry Bulb						Dry Bulb		
		cfm	L/s	kBtuh	kW		75°F 23.9°C	80°F 26.7°C	85°F 29.4°C	kBtuh	kW		75°F 23.9°C	80°F 26.7°C	85°F 29.4°C	kBtuh	kW		75°F 23.9°C	80°F 26.7°C	85°F 29.4°C	kBtuh	kW		75°F 23.9°C	80°F 26.7°C	85°F 29.4°C
HPA36S1	59°F (15°C)	1000	470	33.8	9.9	2130	.95	1.00	1.00	32.6	9.6	2430	.97	1.00	1.00	31.2	9.1	2770	.99	1.00	1.00	29.6	8.7	3160	1.00	1.00	1.00
		1200	565	35.6	10.4	2140	1.00	1.00	1.00	34.4	10.1	2440	1.00	1.00	1.00	32.8	9.6	2780	1.00	1.00	1.00	31.4	9.2	3170	1.00	1.00	1.00
		1400	660	37.2	10.9	2150	1.00	1.00	1.00	35.8	10.5	2450	1.00	1.00	1.00	34.4	10.1	2800	1.00	1.00	1.00	32.4	9.5	3180	1.00	1.00	1.00
	63°F (17.2°C)	1000	470	35.2	10.3	2140	.78	.91	1.00	33.6	9.8	2440	.80	.94	1.00	31.8	9.3	2780	.81	.97	1.00	30.0	8.8	3170	.84	1.00	1.00
		1200	565	36.2	10.6	2150	.83	.98	1.00	34.8	10.2	2450	.85	1.00	1.00	33.0	9.7	2790	.87	1.00	1.00	31.4	9.2	3170	.90	1.00	1.00
		1400	660	37.4	11.0	2150	.88	1.00	1.00	35.8	10.5	2450	.90	1.00	1.00	34.4	10.1	2800	.93	1.00	1.00	32.4	9.5	3180	.96	1.00	1.00
	67°F (19.4°C)	1000	470	37.2	10.9	2150	.63	.76	.89	35.6	10.4	2450	.65	.78	.91	34.0	10.0	2790	.66	.80	.93	32.0	9.4	3180	.67	.82	.97
		1200	565	38.5	11.3	2160	.66	.81	.95	37.0	10.8	2460	.68	.83	.97	35.0	10.3	2800	.70	.85	1.00	33.0	9.7	3180	.72	.88	1.00
		1400	660	39.5	11.6	2170	.70	.86	1.00	37.8	11.1	2470	.72	.89	1.00	35.8	10.5	2810	.73	.91	1.00	34.0	10.0	3190	.76	.94	1.00
	71°F (21.7°C)	1000	470	39.0	11.4	2170	.49	.62	.74	37.6	11.0	2460	.51	.63	.76	36.0	10.6	2810	.51	.65	.78	33.8	9.9	3190	.52	.66	.80
		1200	565	40.5	11.9	2180	.52	.66	.79	39.0	11.4	2470	.53	.67	.81	37.0	10.8	2810	.54	.69	.83	35.0	10.3	3190	.55	.71	.87
		1400	660	41.5	12.2	2180	.54	.70	.84	40.0	11.7	2480	.55	.71	.87	38.0	11.1	2820	.56	.73	.90	35.8	10.5	3200	.58	.75	.93
HPA42S1	59°F (15°C)	1100	520	38.5	11.3	2410	.92	1.00	1.00	37.0	10.8	2720	.94	1.00	1.00	35.6	10.4	3050	.96	1.00	1.00	33.8	9.9	3420	.99	1.00	1.00
		1400	660	41.5	12.2	2390	.99	1.00	1.00	40.0	11.7	2700	1.00	1.00	1.00	38.5	11.3	3030	1.00	1.00	1.00	36.4	10.7	3410	1.00	1.00	1.00
		1700	800	44.5	13.0	2360	1.00	1.00	1.00	42.5	12.5	2680	1.00	1.00	1.00	40.5	11.9	3020	1.00	1.00	1.00	38.5	11.3	3410	1.00	1.00	1.00
	63°F (17.2°C)	1100	520	40.0	11.7	2400	.76	.89	1.00	38.0	11.1	2710	.78	.91	1.00	36.4	10.7	3040	.79	.94	1.00	34.6	10.1	3420	.81	.96	1.00
		1400	660	42.5	12.5	2380	.82	.97	1.00	40.5	11.9	2690	.84	.99	1.00	38.0	11.1	3040	.86	1.00	1.00	36.4	10.7	3410	.89	1.00	1.00
		1700	800	44.0	12.9	2360	.88	1.00	1.00	42.5	12.5	2680	.91	1.00	1.00	40.5	11.9	3020	.94	1.00	1.00	38.5	11.3	3410	.97	1.00	1.00
	67°F (19.4°C)	1100	520	42.5	12.5	2380	.61	.74	.86	40.5	11.9	2690	.63	.76	.88	38.5	11.3	3030	.64	.77	.91	36.6	10.7	3410	.65	.79	.93
		1400	660	45.0	13.2	2360	.65	.80	.95	42.5	12.5	2670	.67	.82	.97	40.5	11.9	3020	.68	.85	.99	38.5	11.3	3410	.70	.87	1.00
		1700	800	46.5	13.6	2340	.69	.86	1.00	44.0	12.9	2660	.71	.89	1.00	42.0	12.3	3000	.73	.92	1.00	39.5	11.6	3400	.75	.96	1.00
	71°F (21.7°C)	1100	520	45.0	13.2	2350	.48	.60	.72	43.0	12.6	2670	.48	.61	.73	41.0	12.0	3010	.49	.63	.75	39.0	11.4	3410	.50	.64	.77
		1400	660	47.0	13.8	2330	.49	.64	.78	45.0	13.2	2640	.51	.66	.80	42.5	12.5	3000	.52	.68	.83	40.5	11.9	3390	.52	.69	.86
		1700	800	48.5	14.2	2310	.52	.68	.84	46.5	13.6	2630	.53	.70	.87	44.5	13.0	2980	.53	.73	.90	41.5	12.2	3380	.55	.75	.93

COOLING PERFORMANCE - EXTENDED RATINGS

Outdoor Model	Entering Wet Bulb Temp	Total Air Volume		Outdoor Temperature - DB °F																							
				85° F (29.4° C)						95° F (35° C)						105° F (40.6° C)						115° F (46.1° C)					
				Total Cooling Capacity		Compressor Motor Watts Input	Sensible To Total Ratio (S/T)			Total Cooling Capacity		Compressor Motor Watts Input	Sensible To Total Ratio (S/T)			Total Cooling Capacity		Compressor Motor Watts Input	Sensible To Total Ratio (S/T)			Total Cooling Capacity		Compressor Motor Watts Input	Sensible To Total Ratio (S/T)		
							Dry Bulb						Dry Bulb						Dry Bulb						Dry Bulb		
		cfm	l/s	kBtuh	kW		75°F 23.9°C	80°F 26.7°C	85°F 29.4°C	kBtuh	kW		75°F 23.9°C	80°F 26.7°C	85°F 29.4°C	kBtuh	kW		75°F 23.9°C	80°F 26.7°C	85°F 29.4°C	kBtuh	kW		75°F 23.9°C	80°F 26.7°C	85°F 29.4°C
HPA48S1	59°F (15°C)	1300	615	44.0	12.9	2720	.95	1.00	1.00	42.0	12.3	3090	.97	1.00	1.00	40.5	11.9	3510	1.00	1.00	1.00	38.5	11.3	3980	1.00	1.00	1.00
		1650	780	47.5	13.9	2730	1.00	1.00	1.00	45.5	13.3	3100	1.00	1.00	1.00	43.5	12.7	3520	1.00	1.00	1.00	41.5	12.2	3990	1.00	1.00	1.00
		2000	945	50.0	14.7	2730	1.00	1.00	1.00	48.0	14.1	3110	1.00	1.00	1.00	46.0	13.5	3530	1.00	1.00	1.00	43.5	12.7	4000	1.00	1.00	1.00
	63°F (17.2°C)	1300	615	45.0	13.2	2720	.78	.92	1.00	43.5	12.7	3090	.80	.94	1.00	41.5	12.2	3510	.82	.97	1.00	39.0	11.4	3980	.84	1.00	1.00
		1650	780	47.5	13.9	2730	.85	1.00	1.00	45.5	13.3	3100	.87	1.00	1.00	43.5	12.7	3520	.89	1.00	1.00	41.5	12.2	3990	.93	1.00	1.00
		2000	945	50.0	14.7	2730	.92	1.00	1.00	48.0	14.1	3110	.94	1.00	1.00	46.0	13.5	3530	.97	1.00	1.00	43.5	12.7	4000	1.00	1.00	1.00
	67°F (19.4°C)	1300	615	48.0	14.1	2730	.62	.76	.89	46.0	13.5	3100	.64	.78	.91	43.5	12.7	3520	.65	.80	.94	41.0	12.0	3990	.66	.82	.97
		1650	780	50.5	14.8	2730	.67	.83	.98	48.0	14.1	3110	.69	.85	1.00	45.5	13.3	3530	.70	.88	1.00	43.0	12.6	4000	.72	.91	1.00
		2000	945	52.0	15.2	2740	.72	.90	1.00	49.5	14.5	3110	.74	.93	1.00	47.0	13.8	3540	.76	.96	1.00	44.5	13.0	4010	.78	.99	1.00
	71°F (21.7°C)	1300	615	50.5	14.8	2730	.48	.61	.74	48.5	14.2	3110	.48	.63	.76	46.0	13.5	3530	.49	.64	.77	43.5	12.7	4000	.51	.66	.80
		1650	780	53.5	15.7	2740	.50	.66	.81	51.0	14.9	3110	.51	.68	.83	48.0	14.1	3540	.52	.70	.86	45.5	13.3	4010	.54	.72	.89
		2000	945	55.0	16.1	2740	.53	.72	.88	52.5	15.4	3120	.54	.73	.91	49.5	14.5	3550	.56	.75	.95	47.0	13.8	4020	.57	.78	.98
HPA60S1	59°F (15°C)	1450	685	53.0	15.5	3470	.91	1.00	1.00	51.0	14.9	3970	.93	1.00	1.00	49.0	14.4	4540	.95	1.00	1.00	46.5	13.6	5180	.98	1.00	1.00
		1830	865	57.0	16.7	3490	.99	1.00	1.00	55.0	16.1	4000	1.00	1.00	1.00	53.0	15.5	4570	1.00	1.00	1.00	50.0	14.7	5220	1.00	1.00	1.00
		2200	1040	60.5	17.7	3520	1.00	1.00	1.00	58.0	17.0	4020	1.00	1.00	1.00	55.5	16.3	4600	1.00	1.00	1.00	53.0	15.5	5240	1.00	1.00	1.00
	63°F (17.2°C)	1450	685	55.5	16.3	3480	.75	.88	1.00	53.0	15.5	3980	.76	.90	1.00	50.5	14.8	4550	.78	.92	1.00	48.0	14.1	5200	.81	.95	1.00
		1830	865	58.5	17.1	3510	.81	.96	1.00	56.0	16.4	4010	.83	.98	1.00	53.0	15.5	4570	.85	1.00	1.00	50.0	14.7	5220	.88	1.00	1.00
		2200	1040	60.5	17.7	3520	.87	1.00	1.00	58.0	17.0	4020	.89	1.00	1.00	55.5	16.3	4600	.92	1.00	1.00	53.0	15.5	5240	.95	1.00	1.00
	67°F (19.4°C)	1450	685	59.0	17.3	3510	.60	.73	.85	56.0	16.4	4010	.62	.75	.87	53.5	15.7	4580	.63	.76	.90	50.5	14.8	5220	.64	.79	.92
		1830	865	61.5	18.0	3530	.65	.79	.93	59.0	17.3	4030	.66	.81	.96	56.5	16.6	4600	.67	.83	.98	53.0	15.5	5240	.69	.86	1.00
		2200	1040	64.0	18.8	3550	.69	.85	1.00	61.0	17.9	4050	.70	.87	1.00	58.0	17.0	4620	.72	.90	1.00	54.0	15.8	5260	.74	.94	1.00
	71°F (21.7°C)	1450	685	62.0	18.2	3530	.47	.59	.71	59.5	17.4	4040	.47	.61	.72	56.5	16.6	4610	.48	.62	.74	53.5	15.7	5250	.50	.63	.77
		1830	865	65.5	19.2	3560	.49	.64	.77	62.5	18.3	4070	.49	.65	.79	59.0	17.3	4640	.51	.67	.82	56.0	16.4	5280	.52	.68	.84
		2200	1040	67.5	19.8	3580	.51	.68	.83	64.0	18.8	4090	.52	.70	.86	61.0	17.9	4660	.54	.71	.88	57.5	16.9	5300	.55	.74	.92

HEAT STRIP ELECTRICAL

Model	Heater Size	Heater Model	Min BLW Speed	AMPS 240V	AMPS 208V	Input kw 240V	Input kw 208V	Circuit 1 240V		Circuit 1 208V		Circuit 2 240V		CIRCUIT 2 208V		SINGLE CIRCUIT 240V		SINGLE CIRCUIT 208V	
								MCA	MAX FUSE	MCA	MAX FUSE	MCA	MAX FUSE	MCA	MAX FUSE	MCA	MAX FUSE	MCA	MAX FUSE
HPA24S1	5KW	PHK05BP-1	Tap 4	20.8	18.1	5	3.8	29.5	30.0	26.1	30.0	0.0	-	0.0	-	43.5	45.0	40.0	45.0
	7.5KW	PHK07BP-1	Tap 4	31.3	27.1	7.5	5.6	42.6	45.0	37.4	40.0	0.0	-	0.0	-	56.5	60.0	51.3	60.0
	10KW	PHK10BP-1	Tap 4	41.7	36.1	10	7.5	55.6	60.0	48.6	50.0	0.0	-	0.0	-	69.5	70.0	62.6	70.0
HPA30S1	5KW	PHK05BP-1	Tap 4	20.8	18.1	5	3.8	31.2	35.0	27.7	30.0	0.0	-	0.0	-	47.0	50.0	43.5	50.0
	7.5KW	PHK07BP-1	Tap 4	31.3	27.1	7.5	5.6	44.2	45.0	39.0	40.0	0.0	-	0.0	-	60.0	70.0	54.8	60.0
	10KW	PHK10BP-1	Tap 4	41.7	36.1	10	7.5	57.2	60.0	50.3	60.0	0.0	-	0.0	-	73.0	80.0	66.1	70.0
HPA36S1	5KW	PHK05BP-1	Tap 4	20.8	18.1	5	3.8	29.8	30.0	26.3	30.0	0.0	-	0.0	-	50.8	60.0	47.4	50.0
	7.5KW	PHK07BP-1	Tap 4	31.3	27.1	7.5	5.6	42.8	45.0	37.6	40.0	0.0	-	0.0	-	63.9	70.0	58.7	60.0
	10KW	PHK10BP-1	Tap 4	41.7	36.1	10	7.5	55.8	60.0	48.9	50.0	0.0	-	0.0	-	76.9	80.0	69.9	70.0
	15KW	PHK15BP-1	Tap 4	62.5	54.2	15	11.3	55.8	60.0	48.9	50.0	26.0	30.0	22.6	25.0	102.9	110.0	92.5	100.0
HPA42S1	5KW	PHK05BP-1	Tap 4	20.8	18.1	5	3.8	33.5	35.0	30.1	35.0	0.0	-	0.0	-	53.9	60.0	50.5	60.0
	7.5KW	PHK07BP-1	Tap 4	31.3	27.1	7.5	5.6	46.6	50.0	41.4	45.0	0.0	-	0.0	-	67.0	70.0	61.7	70.0
	10KW	PHK10BP-1	Tap 4	41.7	36.1	10	7.5	59.6	60.0	52.6	60.0	0.0	-	0.0	-	80.0	80.0	73.0	80.0
	15KW	PHK15BP-1	Tap 4	62.5	54.2	15	11.3	59.6	60.0	52.6	60.0	26.0	30.0	22.6	25.0	106.0	110.0	95.6	100.0
	20KW	PHK20BP-1	Tap 4	83.3	72.2	20	15	59.6	60.0	52.6	60.0	52.1	60.0	45.1	50.0	132.1	150.0	118.2	125.0
HPA48S1	5KW	PHK05BP-1	Tap 4	20.8	18.1	5	3.8	33.5	35.0	30.1	35.0	0.0	-	0.0	-	58.1	70.0	54.6	60.0
	7.5KW	PHK07BP-1	Tap 4	31.3	27.1	7.5	5.6	46.6	50.0	41.4	45.0	0.0	-	0.0	-	71.1	80.0	65.9	70.0
	10KW	PHK10BP-1	Tap 4	41.7	36.1	10	7.5	59.6	60.0	52.6	60.0	0.0	-	0.0	-	84.1	90.0	77.2	80.0
	15KW	PHK15BP-1	Tap 4	62.5	54.2	15	11.3	59.6	60.0	52.6	60.0	26.0	30.0	22.6	25.0	110.2	125.0	99.8	100.0
	20KW	PHK20BP-1	Tap 4	83.3	72.2	20	15	59.6	60.0	52.6	60.0	52.1	60.0	45.1	50.0	136.2	150.0	122.3	125.0
HPA60S1	5KW	PHK05BP-1	Tap 4	20.8	18.1	5	3.8	30.9	35.0	27.4	30.0	0.0	-	0.0	-	63.6	80.0	60.1	80.0
	7.5KW	PHK07BP-1	Tap 4	31.3	27.1	7.5	5.6	43.9	45.0	38.7	40.0	0.0	-	0.0	-	76.6	90.0	71.4	90.0
	10KW	PHK10BP-1	Tap 4	41.7	36.1	10	7.5	57.0	60.0	50.0	60.0	0.0	-	0.0	-	89.6	100.0	82.7	90.0
	15KW	PHK15BP-1	Tap 4	62.5	54.2	15	11.3	57.0	60.0	50.0	60.0	26.0	30.0	22.6	25.0	115.7	125.0	105.3	110.0
	20KW	PHK20BP-1	Tap 4	83.3	72.2	20	15	57.0	60.0	50.0	60.0	52.1	60.0	45.1	50.0	141.7	150.0	127.8	150.0

Century®

DIMENSIONS (IN.) - SMALL BASE

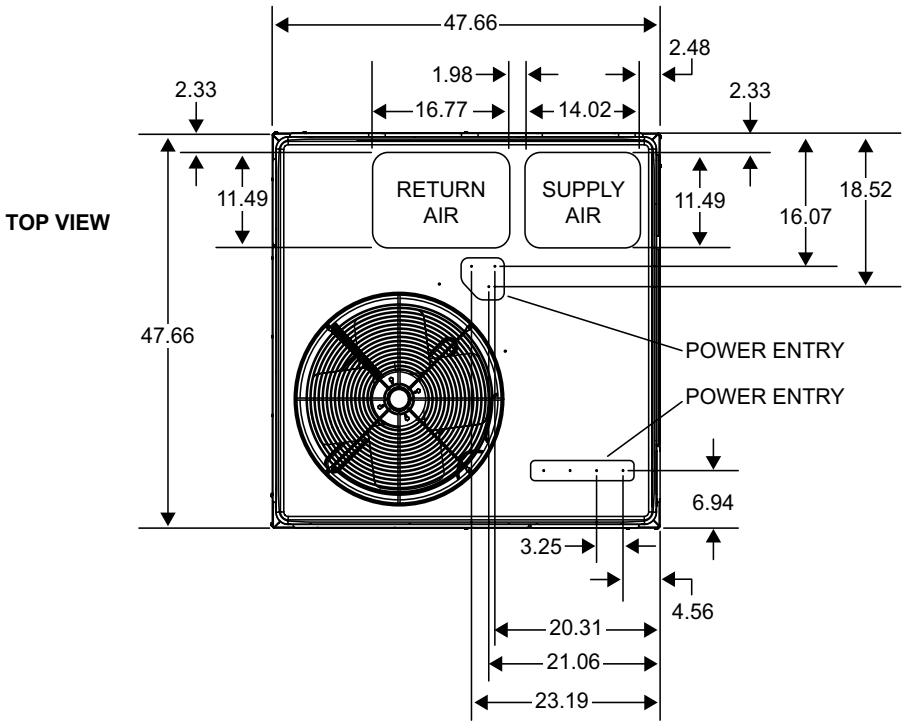

SIDE VIEWS

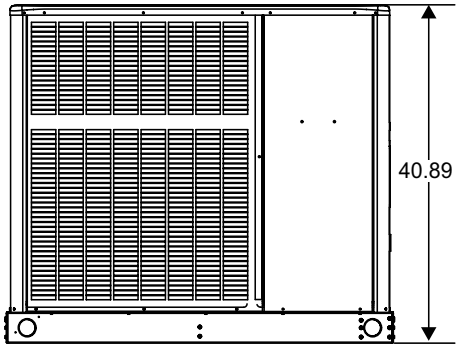

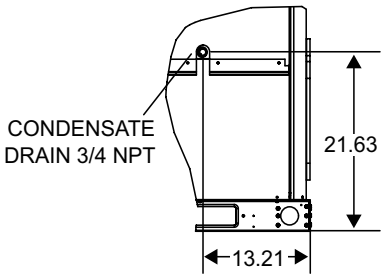

TYPICAL DRAIN LOCATION

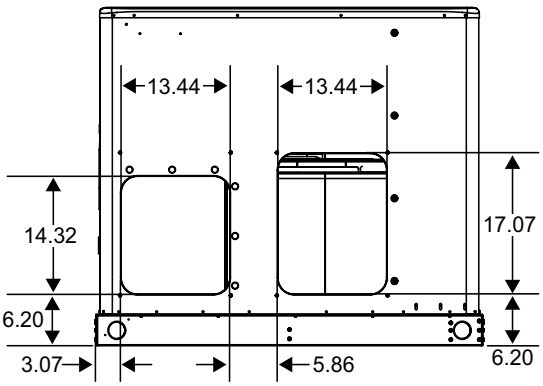

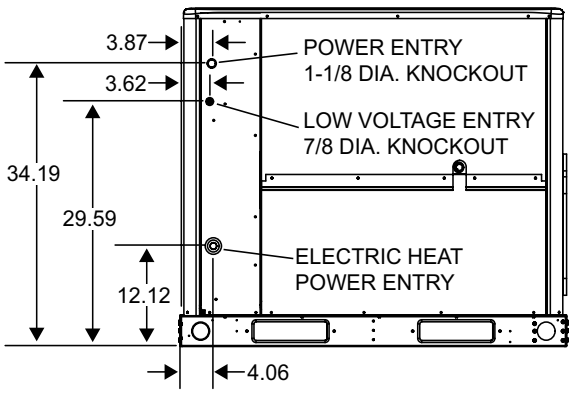

DIMENSIONS (IN.) - LARGE BASE

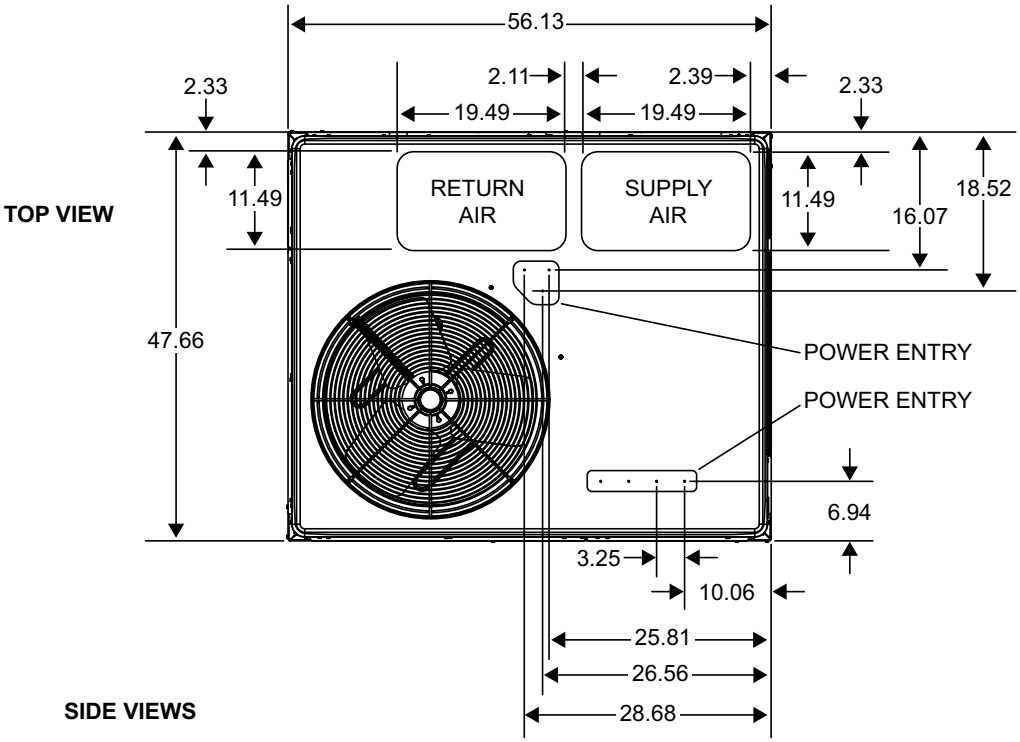

SIDE VIEWS

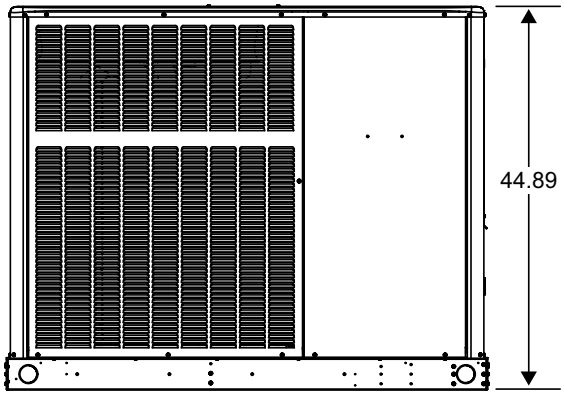

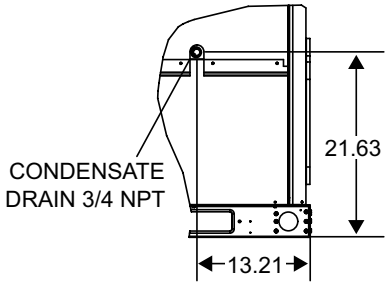

TYPICAL DRAIN LOCATION

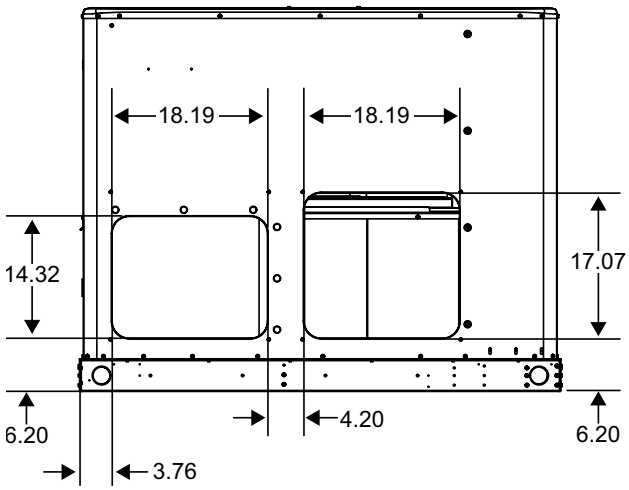

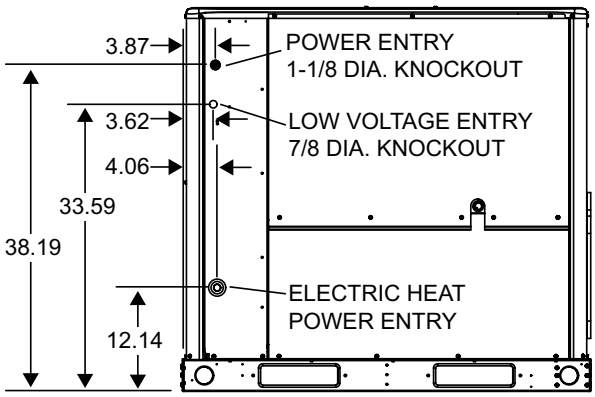

ROOF CURB DIMENSIONS (IN.) - SMALL BASE

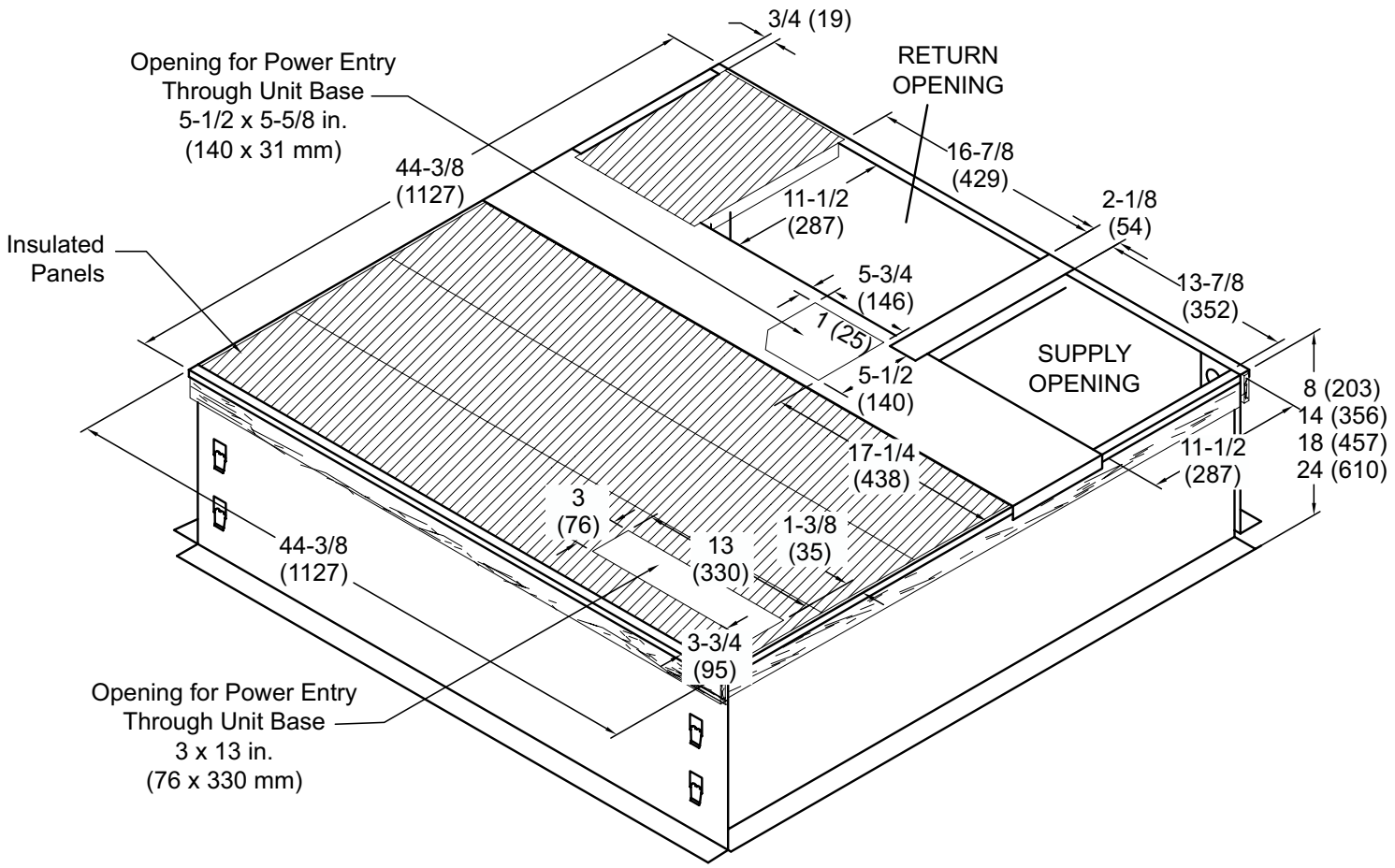

NOTE - Roof deck may be omitted within confines of curb

NOTE - All Curbs:

- IBC 2018 compliant
- CBC 2019 compliant
- Seismic rating - SDS 2.0g z/h=1 Ip=1.5
- Wind rating - 240 mph (Lateral), 214 mph (Uplift)
- Maximum load rating - 800 lbs.
- Tool-less fliter access panels NOT for seismic-rated applications

ROOF CURB DIMENSIONS (IN.) - LARGE BASE

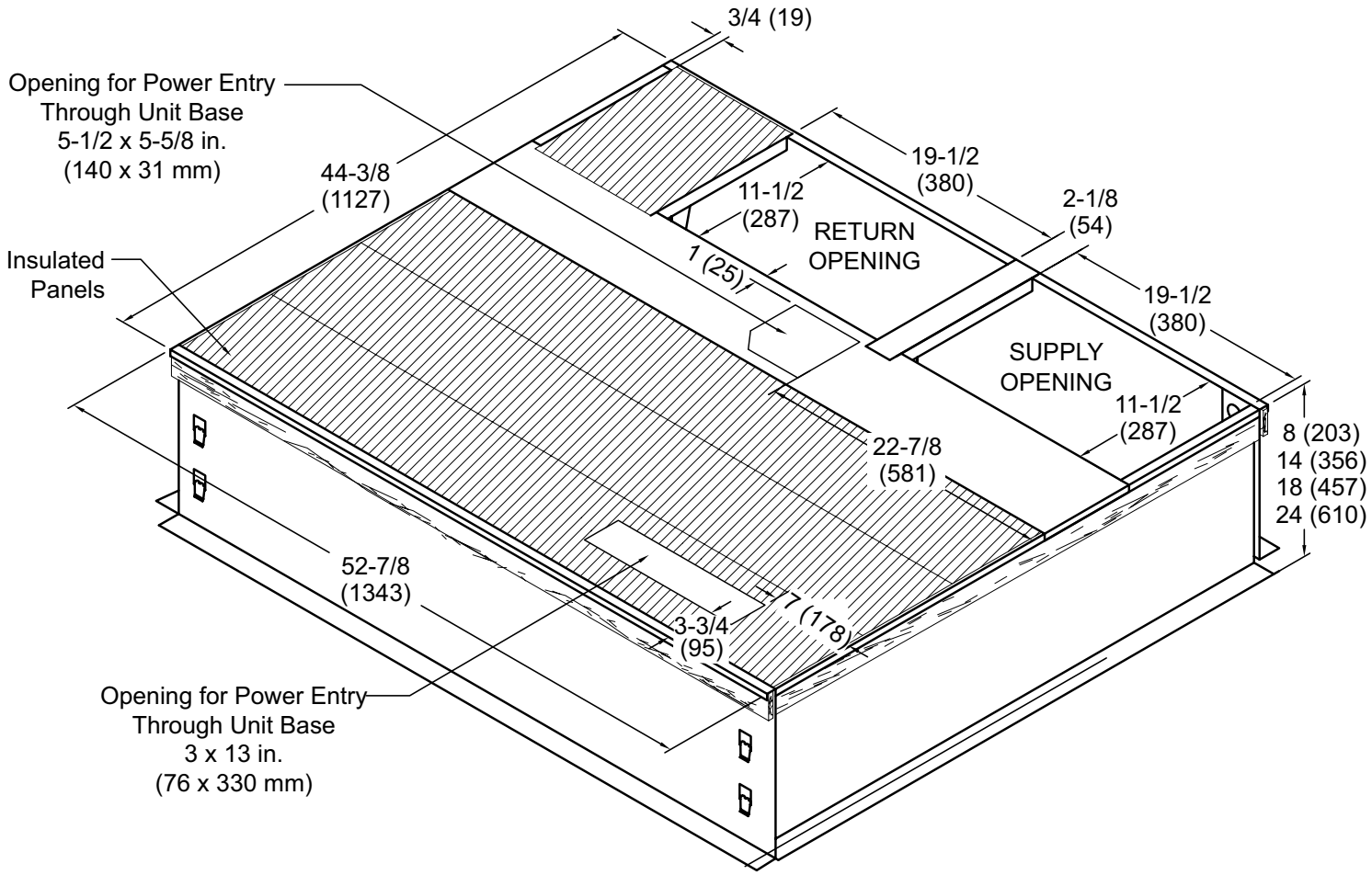

NOTE - Roof deck may be omitted within confines of curb

NOTE - All Curbs:

- IBC 2018 compliant
- CBC 2019 compliant
- Seismic rating - SDS 2.0g z/h=1 Ip=1.5
- Wind rating - 240 mph (Lateral), 214 mph (Uplift)
- Maximum load rating - 800 lbs.
- Tool-less fliter access panels NOT for seismic-rated applications

ADJUSTABLE CURB (KNOCK-DOWN STYLE) DIMENSIONS - SMALL BASE

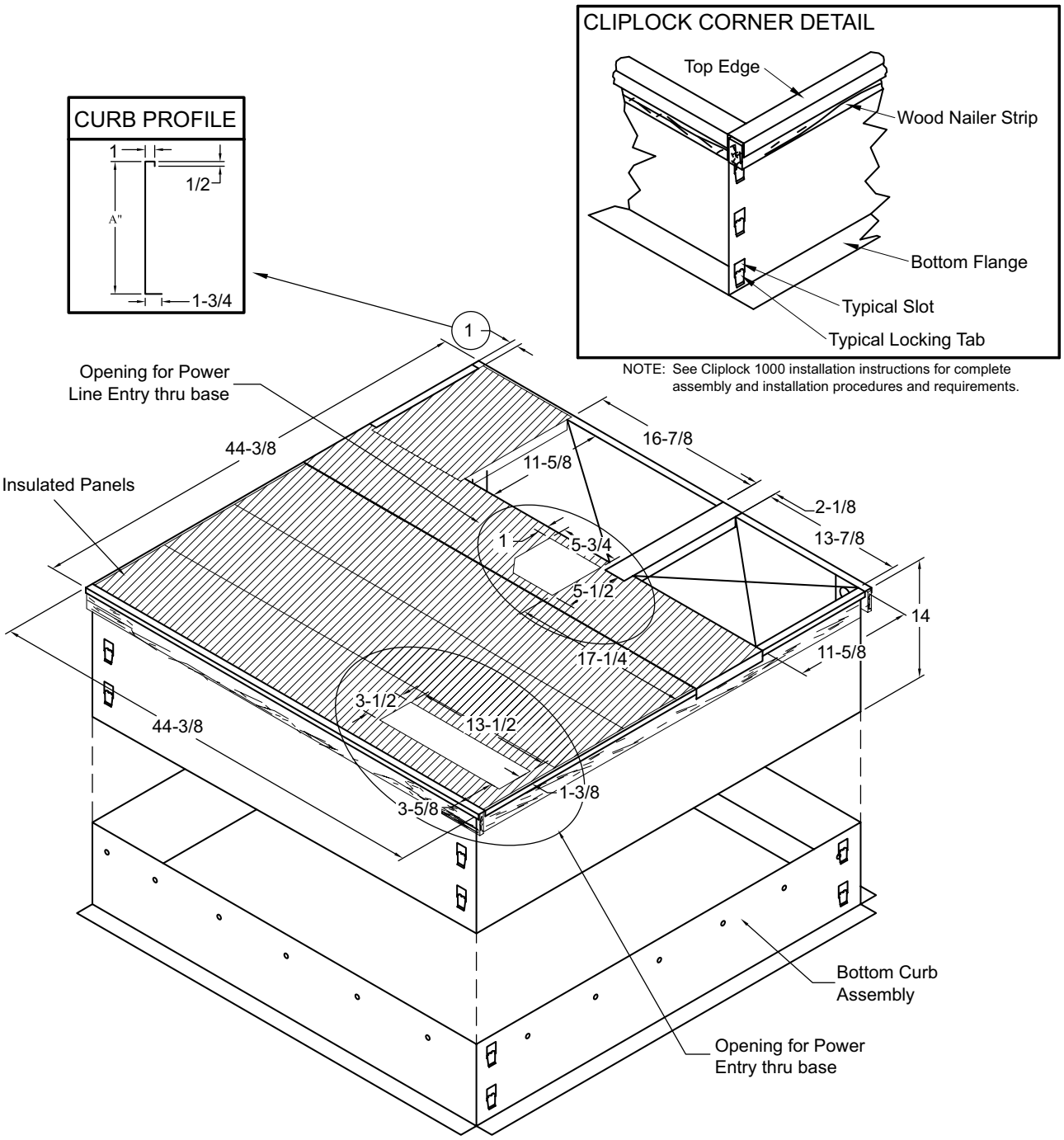

NOTE - Roof deck may be omitted within confines of curb

NOTE - All Curbs:

- IBC 2018 compliant
- CBC 2019 compliant
- Seismic rating - SDS 2.0g z/h=1 Ip=1.5
- Wind rating - 240 mph (Lateral), 214 mph (Uplift)
- Maximum load rating - 800 lbs.
- Tool-less fliter access panels NOT for seismic-rated applications

ADJUSTABLE CURB (KNOCK-DOWN STYLE) DIMENSIONS - LARGE BASE

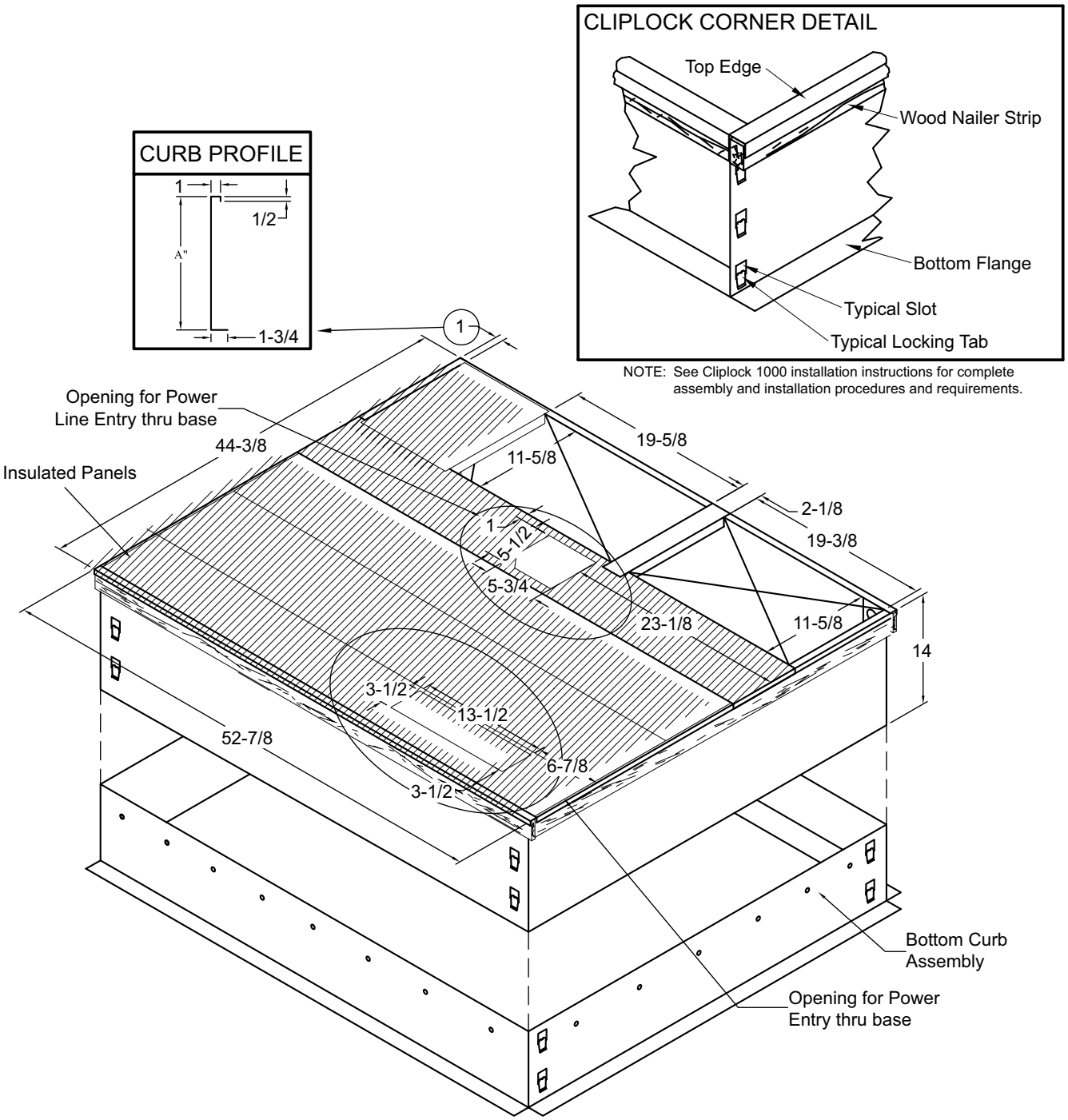

NOTE - Roof deck may be omitted within confines of curb

NOTE - All Curbs:

- IBC 2018 compliant
- CBC 2019 compliant
- Seismic rating - SDS 2.0g z/h=1 Ip=1.5
- Wind rating - 240 mph (Lateral), 214 mph (Uplift)
- Maximum load rating - 800 lbs.
- Tool-less fliter access panels NOT for seismic-rated applications

ADJUSTABLE CURB (WELDED STYLE) DIMENSIONS

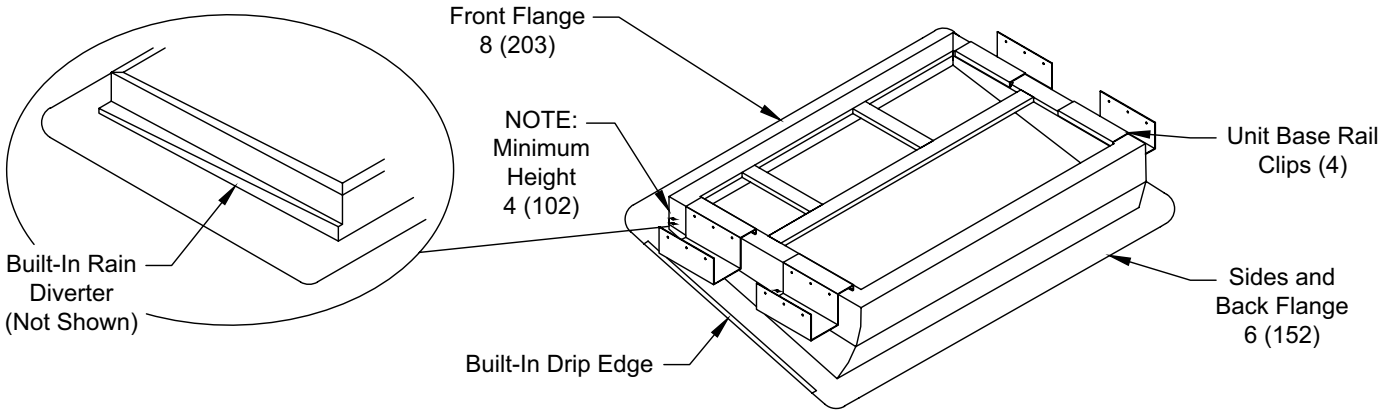

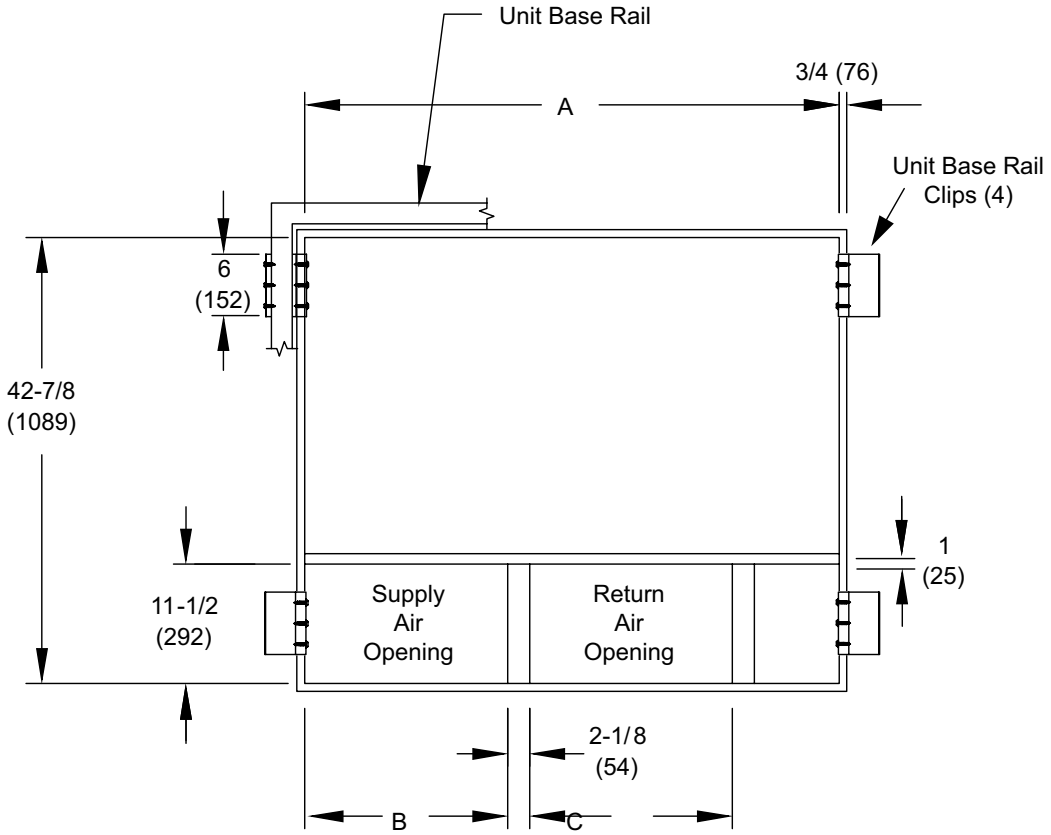

Usage	A		B		C	
	in.	mm.	in.	mm.	in.	mm.
24,30,36	42-7/8	1089	13-7/8	352	16-7/8	429
42,48,60	51-3/8	1305	19-1/2	495	19-1/2	495

ACCESSORIES

Description		Where Used	Kit Number
Compressor Crankcase Heater		24, 30, 36	27U17
		42, 48, 60	27P79
Compressor Hard Start Kit		24, 30	10J42
		36, 42, 48, 60	88M91
Compressor Timed-Off Control		All	47J28
Low Ambient Kit		All	21D20
Electric Heater 5kW - PHK05BP		All	10W47
Electric Heater 7.5kW - PHK07BP		All	10W48
Electric Heater 10kW - PHK10BP		All	10W49
Electric Heater 15kW - PHK15BP		36, 42, 48, 60	10W50
Electric Heater 20kW - PHK20BP		42, 48, 60	10W51
Internal Filter Rack Kit		24, 30, 36	11U73
		42, 48, 60	11U74
8" Height Full Perimeter Curb		24, 30, 36	21J13
		42, 48, 60	21J17
14" Height Full Perimeter Curb		24, 30, 36	21J14
		42, 48, 60	21J19
18" Height Full Perimeter Curb		24, 30, 36	21J15
		42, 48, 60	21J20
24" Height Full Perimeter Curb		24, 30, 36	21J16
		42, 48, 60	21J25
Adjustable Pitch Roof Curb (Knock-Down Style)		24, 30, 36	21J26
		42, 48, 60	21U04
Adjustable Pitch Roof Curb (Welded Style)		24, 30, 36	22V54
		42, 48, 60	22V55
Strapping Kit - Hurricane		Slab	21J74
		Rail	22G53
Strapping Kit - Seismic		All	21J75
Duct Adapter Kit - Horizontal	14 in. dia.	24, 30, 36	21J92
	14 in. dia.	42, 48, 60	21D24
	16 in. dia.	42, 48, 60	22U78
	18 in. dia.	42, 48, 60	22U79
Duct Adapter Kit - Downflow	14 in. dia.	24, 30, 36	20X82
	14 in. dia.	42, 48, 60	21D26
Bottom Power Entry Kit		All	21J78
Base Rail Openings - Closure Kit		All	21J84
Single Point Power - 5kW ASPWR813-1		All	13W88
Single Point Power - 7.5kW ASPWR814-1		All	13W89
Single Point Power - 10kW ASPWR815-1		All	13W90
Single Point Power - 15-20kW ASPWR816-1		36, 42, 48, 60	13W91

"This product complies with all California product labeling laws including, but not limited to, the Safe Drinking Water and Toxic Enforcement Act of 1986, more commonly known as Proposition 65."

Due to ongoing product improvements, specifications and dimensions are subject to change and correction without notice or incurring obligations. Determining the application and suitability for use of any product is the responsibility of the installer. Additionally, the installer is responsible for verifying dimensional data on the actual product prior to beginning any installation preparations.

Third party incentive and rebate programs have precise requirements as to product performance and certification. All products meet applicable regulations in effect on date of manufacture; however, certifications are not necessarily granted for the life of a product. Therefore, it is the responsibility of the applicant to determine whether a specific model qualifies for these incentive/rebate programs.

1900 Wellworth Ave., Jackson MI 49203 • 517.787.2100
www.heatcontroller.com • www.century-hvac.com

CY-HPA_SPEC 3/26

HEAT CONTROLLER
Confidence in any climate
Century