HWCGxxTOA Series - Multi-Position Air Handler (Hydronic Heat)

INSTALLATION GUIDE



1. Safety Instruction

Potential safety hazards are alerted using the following symbols. The symbol is used in conjunction with terms that indicate the intensity of the hazard.

WARNING **This symbol indicates a potentially hazardous situation, which if not avoided, could result in serious injury, property damage, product damage or death.**

CAUTION **This symbol indicates a potentially hazardous situation, which if not avoided, may result in moderate injury or property damage.**

WARNING **Certified technicians or those individuals meeting the requirements specified by NATE may use this information. Property and product damage or personal injury hazard may occur without such background.**

WARNING **All power sources should be disconnected prior to servicing. Failure to do so may cause personal injury or property damage.**

WARNING **Product designed and manufactured to permit installation in accordance with local and national building codes. It is the installer's responsibility to ensure that product is installed in strict compliance with national and local codes. Manufacturer takes no responsibility for damage (personal, product or property) caused due to installations violating regulations. In absence of local/state codes, refer to National Electric Code: NFPA 90A & 90B Uniform Mechanical Code.**

WARNING **When this unit is installed in an enclosed area, such as a garage or utility room with any Carbon Monoxide producing devices (i.e. automobile, space heater, water heater etc.) ensure that the enclosed area is properly ventilated.**

CAUTION **Only factory authorized kits and accessories should be used when installing or modifying this unit unless it is so noted in these instructions. Some localities may require a licensed installer/service personnel.**

WARNING **Unit is not approved for outdoor installations.**

WARNING **The unit is designed for operation with 108/120V, single phase, 60 Hz power supply. HCI will not be responsible for damages caused due to modification of the unit to operate with alternative power sources.**

2. Ensure These Steps are Completed to Reduce Chances of a Frozen Hydronic Coil

- Ensure the air handler motor and control board are receiving proper power input per the wiring diagram.
- Ensure the hydronic coil has access to a constant water supply as loss of water movement can lead to a frozen coil.
- Prime the water circulator pump using the purge valve per the "Start-Up" section of this installation guide.
- Run the pump for five minutes after priming to ensure no air is in the system.
- If any interruption to the water supply occurs, prime the water circulator pump again.
- Insulate the water piping in unconditioned spaces or within structures that may be unoccupied during freezing conditions.
- If the air handler does not have an internal pump and/or relies on an external boiler system for hot water, the installer may need to rewire the system to ensure that it maintains access to a constant water supply.

3. Inspection

✓ On receiving the product, visually inspect it for any major shipping related damages. Shipping damages are the carrier's responsibility. Inspect the product labels to verify the model number and options are in accordance with your order. Manufacturer will not accept damage claims for incorrectly shipped product.

4. Installation Preparation

Read all the instructions in this guideline carefully while paying special attention to the WARNING and CAUTION alerts. If any of the instructions are unclear; clarify with certified technicians. Gather all the tools needed for successful installation of the unit prior to beginning the installation.

4A. Clearances

This unit is designed for zero clearance installation on three sides and adequate clearance to provide access for service in the front. A minimum of 2.5 – 3.5 feet clearance is recommended on the front end (Fig 4A-1).

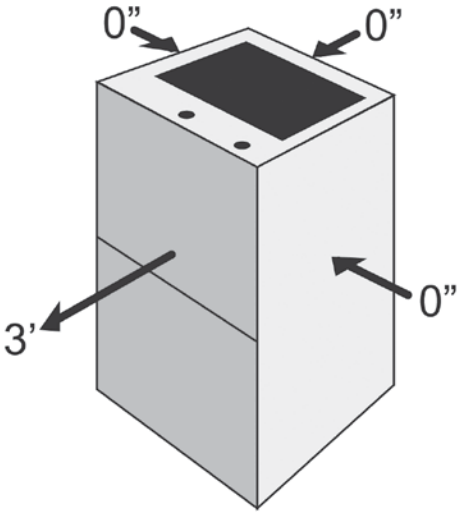

Fig 4A-1. Minimum Clearance for Air Handler

4B. Installation Options

If the unit is to be installed in garages, warehouses or other areas where they may be subjected to physical damage, adequate protective barriers must be installed. Unit **MUST** be installed 18” away from source of ignition.

If the unit is located in high humidity areas like attics or unconditioned garage; the air handler casing might experience nuisance sweating. In such installation scenarios, wrapping the casing with a 2” fiberglass insulation with vapor barrier **SHOULD** be used.

4C. Condensate Drain Preparation

✓ An auxiliary drain pan must be provided by the installer and placed under the entire unit with a separate drain line that is properly sloped and terminated in an area visible to the home owner. The auxiliary pans provide extra protection to the area under the unit should the primary and secondary drain plug up and overflow. As expressed in our product warranty; **HCI WILL NOT BE BILLED FOR ANY STRUCTURAL DAMAGES CAUSE BY FAILURE TO FOLLOW THIS INSTALLATION REQUIREMENT.** The drains from the auxiliary drain pan must be installed according to the local building codes.

4D. Condensate Drain

CAUTION **Drain lines from the auxiliary drain pan should NOT be connected to the primary drain line of the coil.**

The drain lines must be installed with ¼” per foot pitch to provide free drainage. A condensate trap MUST be installed on the primary drain line to ensure proper drainage of the condensate. The trap must be installed in the drain line below the bottom of the drain pan (Fig. 4D-1)

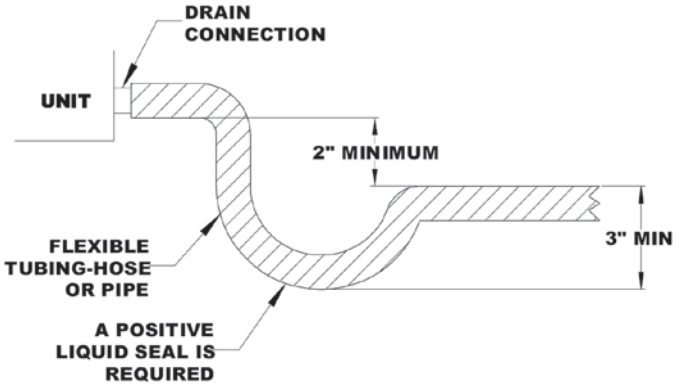

Fig 4D-1. Condensate Drain Trap

CAUTION **Since coil is upstream of the blower, all drains MUST be trapped or sealed. Failure to do so will result in condensate overflow from the drain pan. HCI will NOT be responsible for any damages resulting from failure to follow these instructions.**

CAUTION **If the drain pan is constructed of nylon or plastic; use Teflon tape to connect the drain lines to the threads in the drain pan. DO NOT USE SOLVENT BASED PIPE DOPE. THIS WILL REDUCE THE LIFE OF THE PAN.**

The drain pan has primary (white) and secondary (red) drain connections. If a secondary drain line is required, it should be run separately from the primary and should terminate in a highly visible location. Condensate disposal through the secondary drain line indicates that the primary drain line is plugged and needs cleaning. If a secondary drain line will not be provided, plug the secondary drain. Drain plugs are NOT to be reused without plumbers tape or putty. Drain line connection should be finger tightened, then turned no more than one complete turn as needed to ensure a firm connection. DO NOT overtighten connection or damage may occur.

4E. Ductwork

Ductwork for air conditioning systems should be installed in accordance with standards of the National Fire Protection Association Pamphlet No. 90A or 90B, and also be sized in accordance with National Environmental System Contractors Association Manual K, whichever is applicable.

On any job, non-flammable flexible collars should be used for the return air and discharge connections to prevent transmission of vibration. Although these units have been specially designed for quiet vibration-free operation, air ducts can act as soundboards, and if poorly installed, amplify the slightest vibration to the annoyance level.

All main supply and return air drops should be properly size as determined by the designer of the duct system and should not necessarily be the size of the duct flange openings of the unit.

When installing a central air return grille in or near the living space, it is advisable to design the ductwork so that the grille is not in direct line with the opening in the unit. The use of one or two elbows and acoustical duct liner will also ensure quieter system operation.

It is recommended that wherever supply and return air sheet metal duct pass through unconditioned areas, they be insulated to prevent excessive heat loss during heating operation. When applied in conjunction with summer air conditioning, sheet metal duct routed through unconditioned areas should be insulated and have an outside vapor barrier to prevent formation of condensation.

5. Installation

CAUTION **Ensure that the unit is adequately sized. The tonnage of the outdoor unit should never exceed the tonnage of this unit.**

WARNING **The coil was manufactured with a dry nitrogen pre-charge. Release the pressure through the Schrader valve test port prior to installation. If holding pressure is not present, return coil to distributor for exchange.**

CAUTION **Only lead free solder should be used to connect water (hydronic) coil to the hot water source.**

WARNING **Prior to connecting the water (hydronic) coil, make sure that the hot water supply is turned off. Water from the heater could be extremely hot and might result in burns and other personal injury along with equipment damage. Ensure that proper safety gear is being used prior to making connections.**

CAUTION **Some HCI coils may include a Schrader valve on the suction manifold. Ensure that the Schrader valve and valve core (where present) are protected from heat during brazing and installation to prevent leakage. Use a core removal tool to temporarily remove the core when brazing. Replace the core once brazing is completed.**

✓ Clean coil fins with degreasing agent or mild detergent and rinse fins clean prior to installation.

✓ The refrigerant line sizes should be selected according to the recommendations of the outdoor unit manufacturer.

✓ Care must be taken to ensure all connection joints are burr-free and clean. Failure to do so may increase chances of a leak. It is recommended to use a pipe cutter to remove the spun closed end of the suction line.

✓ To reduce air leakage, rubber gommets may be present where the lines pass through the coil case. To avoid damage, remove grommets prior to brazing by sliding over the lines. Use a quenching cloth or allow the lines to cool before reinstalling the grommets.

✓ Use of wet rags/quenching cloth is highly recommended to prevent weld-related damages to the casing and Schrader valve (if present).

5. Air Handler Orientation

This unit can be installed in vertical or right horizontal position without modifications. In case of a counterflow application, the horizontal drain pan **MUST** be removed. Fig. 6-1 shows the various orientations this air handler can be installed in.

CAUTION When the unit is used in a horizontal orientation, an auxiliary drain pan **MUST** be provided by the installer and placed under the entire unit with a separate drain line that is properly sloped and terminated in an area visible to the home owner. The auxiliary pan provides extra protection to the area under the unit should the primary and secondary drains become plugged and overflow. As expressed in our product warranty, **failure to follow this installation requirement will void the product warranty.** The drain from the auxiliary drain pan must be installed according to the local building codes.

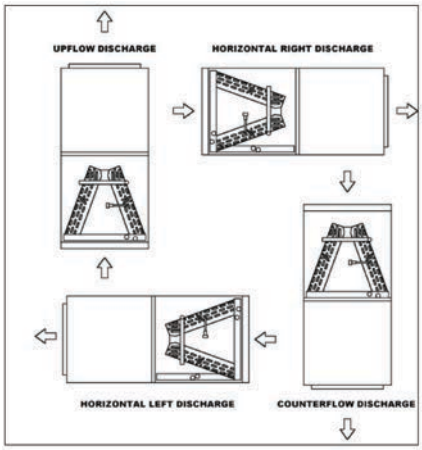

Fig 6-1

6A. Horizontal Left-hand Installation





1. With Air Handler in vertical position remove all access panels.

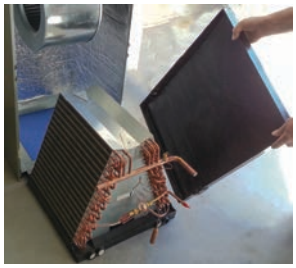

2. Remove horizontal drain pan from right hand side of coil.



3. Relocate the removed horizontal drain pan to the left side of the coil.

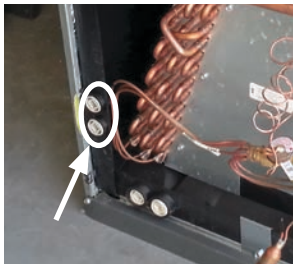

4. “P” traps must be installed on primary and secondary drains of the horizontal drain pan.



5. Reinstall all access panels to the unit.

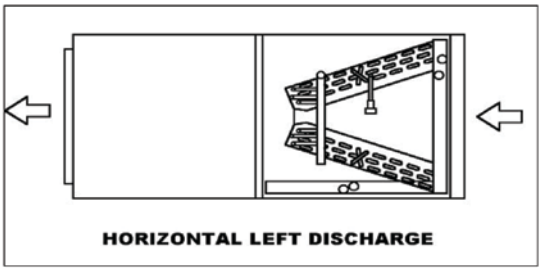

Fig 6A-1 - Air flow direction in Horizontal Left application

6B. Counter/Downflow Installation

A downflow kit (DFK) is required for counter/downflow air handler installation

DFK Kits		
Downflow Kit	Model	Style
DFK-2	24	1
DFK-3	23	1
DFK-6	35	2
DFK-7	36	1
DFK-9	60	1
DFK-10	47	2
DFK-11	48	1

1. Remove the bottom access panel (1), top access panel (2), filter cover (4), and air filter (5.) Remove the A-coil assembly (6) with side drain pan (3) as shown in figure below.

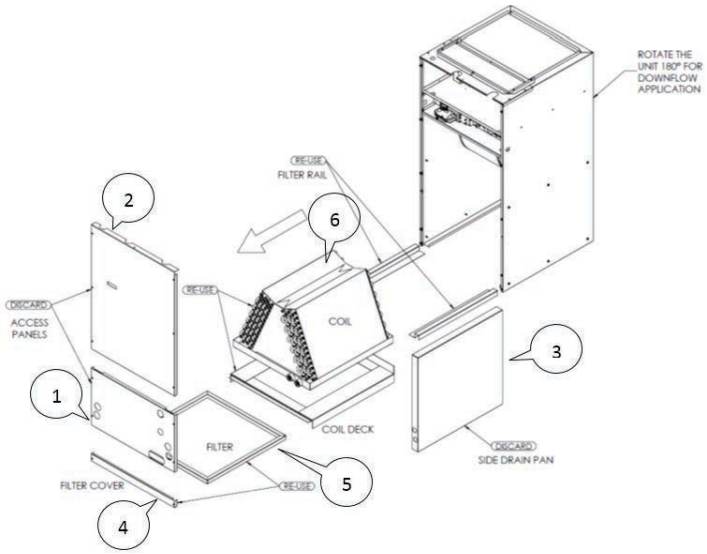

Upflow assembly

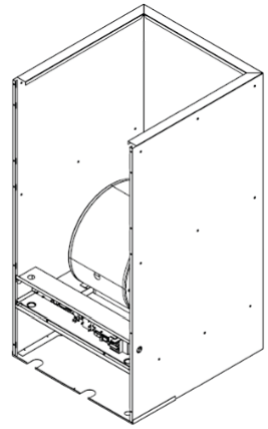

180° Rotation

2. Rotate the unit 180° as shown in the figure. Discard existing bottom access panel (1), top access panel (2) and side drain pan (3.)

3. For STYLE 1 downflow kit ,rotate the filter rails 180° and re-installed the filter rails. After fastening filter rails, slide the air filter back as shown below (A).
For STYLE 2,Fasten the Filter Rails **D** and **E** to the wrapper and slide the air filter back as shown below (B).

A: Style 1

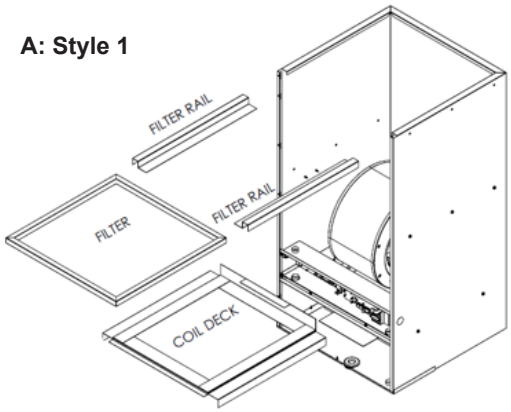

B: Style 2

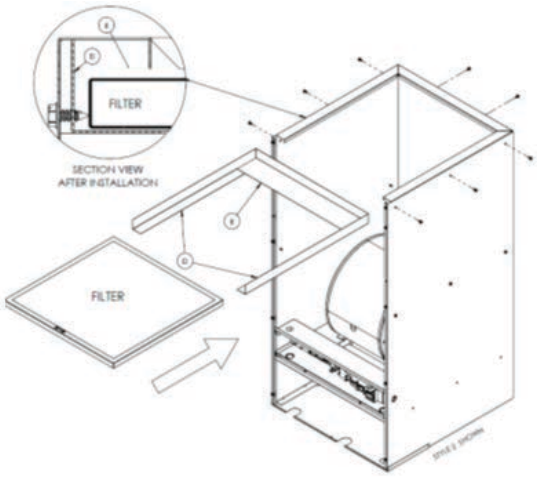

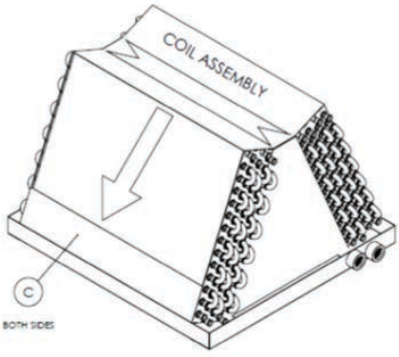

4. Add Block Off Plate **C** on the both side of coil as shown.

5. Re-install and fasten the coil deck. After installing coil deck properly, slide the coil assembly back as shown below.

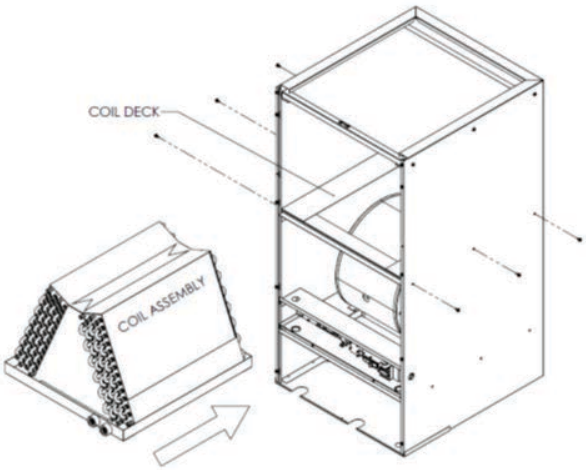

6. Install and fasten the filter cover first,then the blower and control access panel B and last will be coil access panel **A** to the unit as shown below

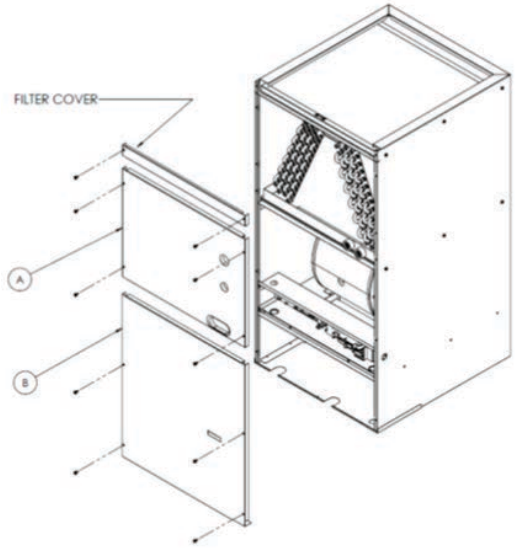

The process of re-installing downflow application configuration for Style 1 and Style 2 respectively:

Re-installing Downflow Configuration Style-1

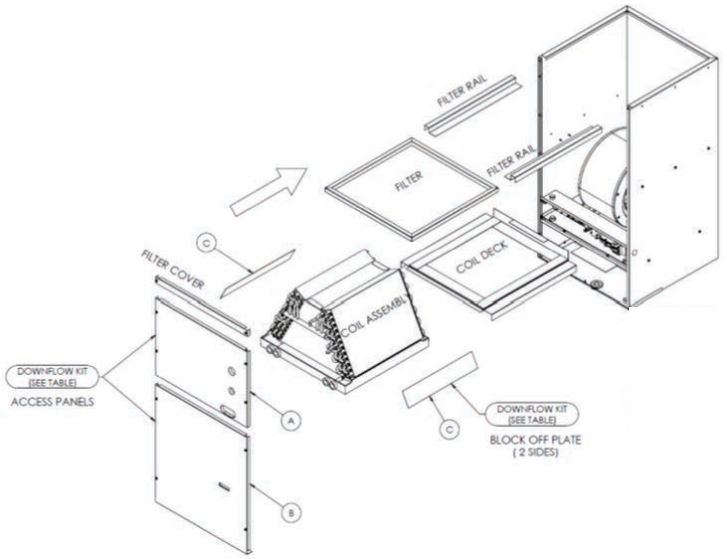

Re-installing Downflow Configuration Style-2

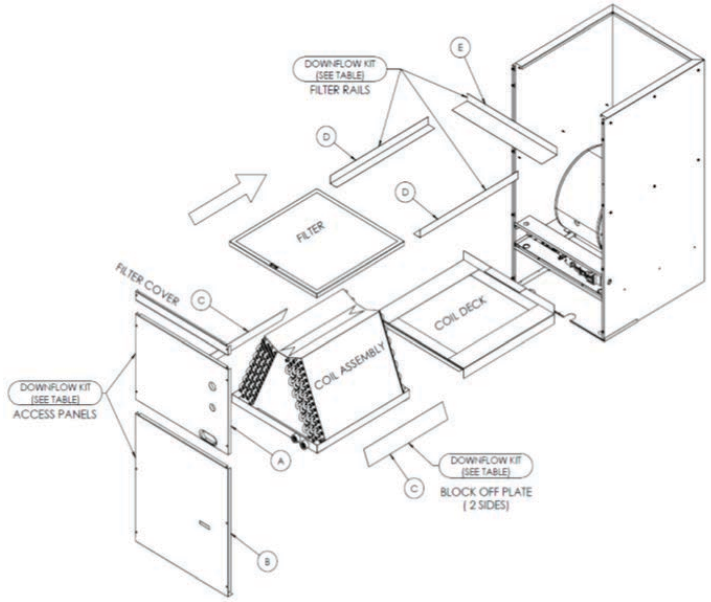

7. Connecting Ducting

1. Secure supply air ducting to the top of the air handler. Canvas connectors are recommended for reducing potential noise transmission.

2. Secure the return air ducting to the air handler cabinet.

8. Metering Devices/Liquid Line Connection

HCI coils are available with two kinds of metering devices a) flowrator or b) TXV. The following instructions are separated into sections by metering device.

8A. Flowrator Coils

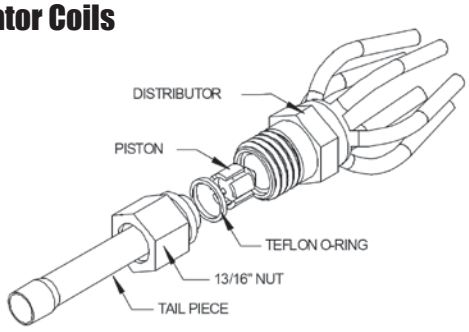

Fig 8A-1. Flowrator assembly components

CAUTION **Use Piston sizes recommended by the outdoor unit manufacturer whenever possible. The piston should be sized according to the capacity of the outdoor unit.**

WARNING **Failure to install the proper piston can lead to poor system performance and possible compressor damage.**

I. Installation

Note: Photos are for basic illustration purposes only. Actual equipment configuration may differ from that shown.

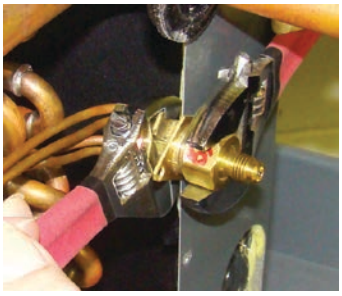

I-1. Disassemble flowrator body using two wrenches and unscrewing with a counterclockwise motion.

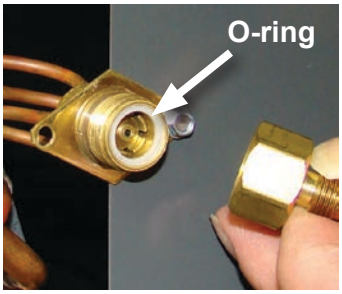

I-2. Replace the Teflon O-ring (located between the halves). Discard Schrader if present.

CAUTION **Be aware of the Teflon O-ring. Be sure to replace the O-ring to attain a proper seal. (The Teflon O-ring is located between the two halves of the flowrator)**



I-3. Slide the attachment nut onto the liquid line stub out.

I-4. Braze the stub-out portion to the liquid line and let cool.

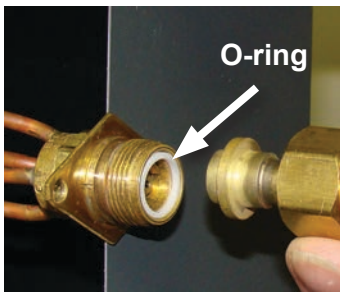

I-5. Taking care that the white Teflon seal is still in place inside the flowrater body, firmly seat the stub and screw the attachment nut to flowrater body.

I-6. Tighten the nut to a torque of approximately 10-30 ft-lbs. Do NOT overtighten the nut. Overtightening will impede the piston movement during operation.

II. Piston Replacement

Note: Photos are for basic illustration purposes only. Actual equipment configuration may differ from that shown.



Fig 8A-2

During some installations, a piston change may be required. If so, the installer **MUST** change the piston. Use piston sizes recommended by the outdoor unit manufacturer. If a sizing chart is not available, use the piston size chart provided below to size the required piston. The size of the piston is stamped on the piston body (Fig 8A-2).

Use the chart below when matching coil with an outdoor unit with a different nominal capacity than the coil.

Outdoor Unit Capacity	R22 Orifice Size	R410a Orifice Size
12,000	0.041	N/A
18,000	0.055	0.049
24,000	0.059	0.055
30,000	0.068	0.059
36,000	0.074	0.068
42,000	0.080	0.074
48,000	0.084	0.080
60,000	0.092	0.089

II-1. Evacuate the system as per manufacturer guidelines and recommendations

II-2. Turn the 13/16” nut once to release any residual pressure in the coil.



II-3. After ensuring that the coil is free of any residual pressure, disassemble the flowrator body completely using two wrenches. Take great care not to distort the feeder tubes. The wrench used to clasp the nut should be turned in counter-clockwise direction to unscrew the nut.

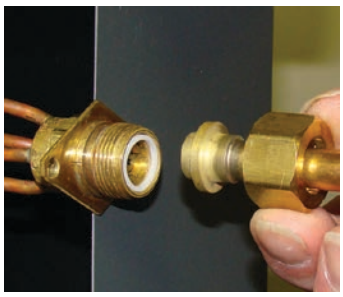

II-4. Slide the 13/16” nut over the lineset and separate the two halves of the flowrator.

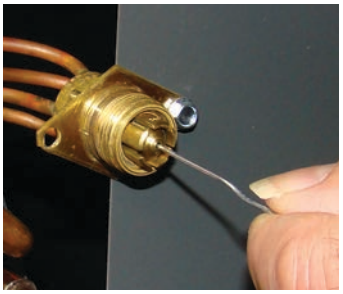

II-5. Pull the piston out using a small wire or pick. Verify the piston size (size is typically stamped on the body of the piston - Fig 8A-2). If a different piston size is required by the outdoor unit manufacturer, replace the piston using the small wire provided with the piston kit.

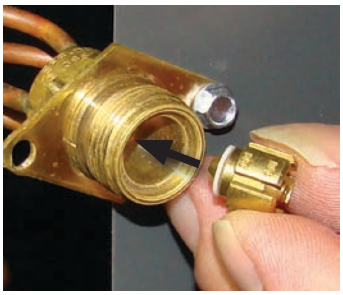

II-6. Replace the piston with one of the correct size. Do not force the new piston into the body. Make sure the piston moves freely in body.

CAUTION **Pay close attention to the piston orientation. The pointed end of the piston MUST go into the distributor body, towards the coil. Failure to ensure this orientation will cause the piston to be bypassed during operation which might damage the outdoor unit.**

II-7. Assemble the two halves correctly and ensure that the white Teflon O-ring is present between the two halves (See I-5). Slide the 13/16" nut onto the distributor body.

CAUTION **Be aware of the Teflon O-ring. Be sure to replace the O-ring to attain a proper seal. (The Teflon O-ring is located between the two halves of the flowrator)**

II-8. Tighten the nut to a torque of approximately 10-30 ft-lbs. Do NOT overtighten the nut. Overtightening will impede the piston movement during operation.

II-9. If present, slide the rubber grommet back to position to prevent air leakage.

7B. TXV Coils

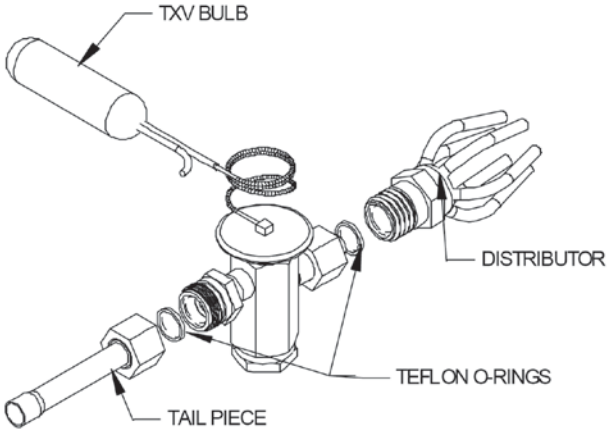

Fig 8B-1. Components of a typical TXV assembly

WARNING **The sensing bulb and TXV body MUST be protected from overheating during brazing. The sensing bulb and TXV body must be covered using a quench cloth or wet cloth when brazing. Pointing the brazing flame away from the valve and sensing bulb provide partial protection only.**

CAUTION **Ensure that the TXV selected is compatible with the refrigerant used in the outdoor system (R22 or R410A). TXV caps are painted green for R22 or pink for R410A. In absence of color, the caps will be marked with the compatible refrigerant.**

CAUTION **The valves should be sized according to the capacity of the outdoor unit. Failure to install the right valve can lead to poor performance and possible compressor damage.**

I. TXV Bulb Horizontal Mounting

The orientation and location of the TXV bulb has a major influence on the system performance.

CAUTION **Ensure that the TXV bulb is in direct contact with the suction/vapor line. Gap between the bulb and tube should be avoided. Failure to do so will impair the proper functioning of the TXV valve.**

It is recommended that the TXV bulb be installed parallel to the ground (on a horizontal plane). The bulb position should be at 2 o'clock or 10 o'clock. Fig. 7B-2 shows the recommended position for the TXV bulb installation in the horizontal plane.

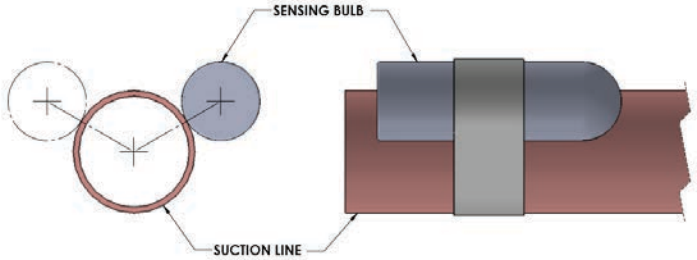

Fig 7B-2. Recommended location for horizontal TXV bulb mount

The TXV sensing bulb SHOULD be mounted on the suction line approximately 6" from the TXV or coil housing using the metal clamp provided. In order to obtain a good temperature reading and correct superheat control, the TXV sensing bulb must conform to ALL of the following criteria:

1. The sensing bulb MUST be in direct and continuous contact with the suction line.
2. The sensing bulb should be mounted horizontally on the suction line.
3. The sensing bulb MUST be mounted at the 2 o'clock or 10 o'clock position on the circumference of the suction line.
4. The sensing bulb MUST be insulated from outside air.

A properly mounted sensing bulb will prevent false readings caused by liquid refrigerant that may have formed inside the suction/vapor line. Insulation will protect the sensing bulb from false readings due to contact with warm air.

II. TXV Bulb Vertical Mounting

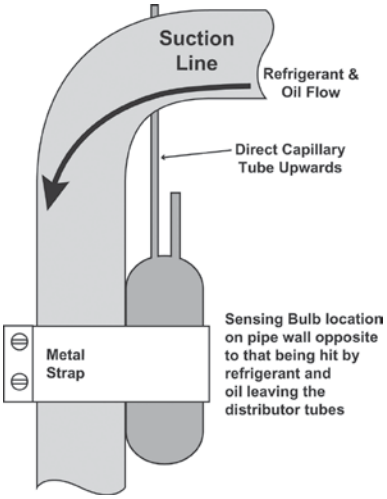

Fig 8B-3. Recommended location for vertical TXV bulb mount

As recommended in Section 8B-I, the TXV sensing bulb should be mounted in a horizontal plane in relation to the suction/vapor line. However, some installation configurations may require that the sensing bulb be mounted vertically. In this instance, place the bulb opposite the piping wall being hit by refrigerant and oil leaving the distributor tubes, and with capillary tubes directed upwards as shown in Fig. 8B-3.

CAUTION **If the TXV sensing bulb is mounted vertically, the capillary MUST be directed upwards. The bulb must be mounted on the wall opposite to that being directly hit by the refrigerant and oil leaving the distributor tubes.**

III. Field-Installed TXV Retrofit

Note: Photos are for basic illustration purposes only. Actual equipment configuration may differ from that shown.

When installing an expansion valve, it is not necessary to slide the coil out of the housing.



III-1. Disassemble the flowrator body using two wrenches. Unscrew the body with a counterclockwise motion.

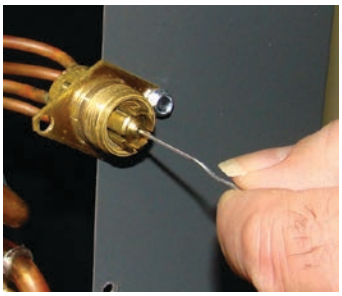

III-2. Remove the existing flowrator piston using a small wire or pick.

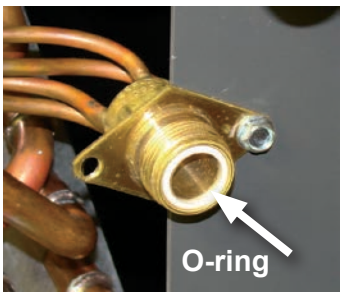

III-3. Replace the Teflon O-ring seal in place (located between the halves).

III-4. Inspect the TXV box to confirm that the valve is compatible with the refrigerant in the system.

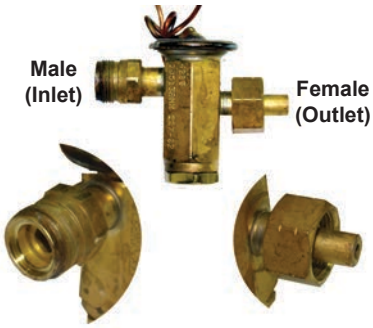

III-5. Remove the valve from the box and note the location of the inlet side (threaded male port) and the outlet side (female swivel nut port).

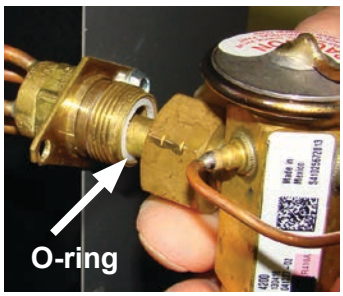

III-6. After ensuring that the Teflon O-ring seal is still in place inside the flowrator body, screw the female swivel nut onto the flowrator body.

III-7. Slide attachment the nut onto the liquid line stub out (See 8A, I-3)

III-8. Braze the stub-out portion to the liquid line and let cool.

WARNING **Do not attempt to touch brazed joints while hot. Severe burns may result.**

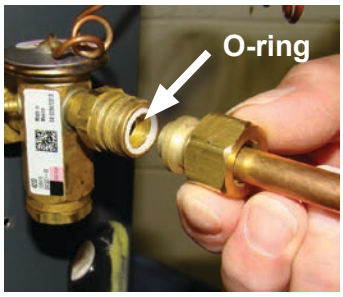

III-9. Remove the additional Teflon O-ring seal from the box and place on the shoulder just inside the TXV inlet port. Screw the nut attached to the stub-out portion of the flowrator body onto the inlet port of the TXV.

III-10. Tighten all connections taking care to use proper back up.

III-11. Remove the valve identification sticker from the valve and place it adjacent to the HCI model number on unit name plate.

III-12a. Some HCI coils come with a Schrader valve on the suc-tion line. **If a Schrader port is present:**



A. Remove the valve stem from the Schrader port mounted on the suction line.

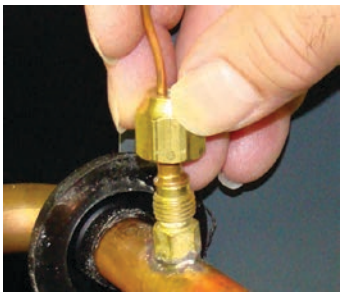

B. Screw flare nut on TXV equalization tube on to the Schrader valve stem.

III-12b. In some cases, a suction line schrader port may not be present. **If a Schrader port is NOT present:**



A. Install a field-supplied braze-on schrader valve like that shown on the suction line near the intended sensing bulb mounting location. Follow valve manufacturer instructions and recommendations for installation.

B. Attach equalizer tube to valve as described in section III-12a above.

III-13. Mount the sensing bulb as described in section 8B-I or 8B-II.

CAUTION **When handling or manipulating the equalizer tube, take great care not to kink or make extreme bends in the tubing.**

9. Connecting Refrigerant Lines



1. Release nitrogen holding charge by depressing the Shrader Valve at the liquid line connection on the air handler. If no gas releases from the air handler, contact distributor regarding potential leak.

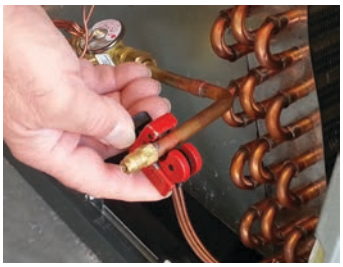

2. Cut off Shrader Valve fitting at the liquid line connection. Use a tubing cutter for this step. Clean the burr from the cut tubing to reduce the chance of future leaks. Connect the liquid line to the tubing at the indoor unit.

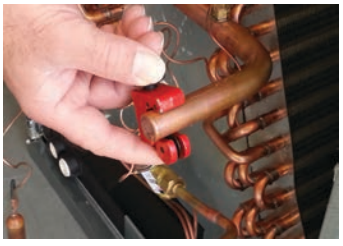

3. Use a tubing cutter to remove the spun end from the suction line connection at the air handler. Clean the burr from the cut tubing to reduce the chance of future leaks.

4. To avoid heat damage to grommets where present, remove these prior to brazing by sliding them over the refrigerant lines and out of the way.

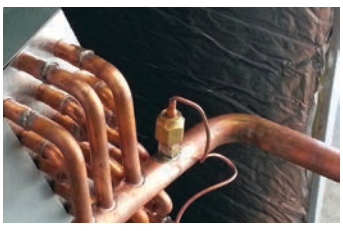

5. Check to determine if the evaporator coil has a Shrader fitting on the suction manifold. If yes, remove the valve core to prevent heat damage during brazing. Replace the valve core once the piping has cooled.

6. If the air handler has a TXV metering device, remove the sensing bulb from the suction line prior to brazing to prevent heat damage from occurring. Replace the sensing bulb once the piping has cooled.





7. Flow nitrogen through the piping when brazing.

8. Braze both refrigerant line connections using proper brazing procedures.

9. When all line connections are brazed, perform a proper system evacuation procedure per the outdoor unit manufacturer instructions.

10. Seal the penetration openings where the lineset piping enters the air handler cabinet.

10. Leak Check

1. Following outdoor unit manufacturer instructions and recommendations, charge the system with dry nitrogen to a maximum pressure of 150 PSIG.

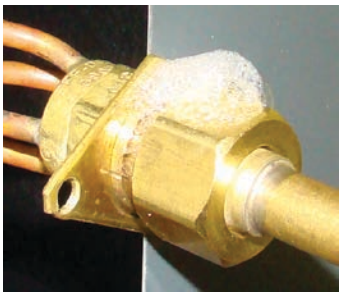

2. Check all brazed and screw-on line connections by applying a soap solution to the joint. A leak will produce bubbles in the soap solution.

3. If any leaks are discovered, relieve system pressure and repair leaks. Repeat steps 1-3.

4. With no leaks or weak connections present, evacuate the system and charge as per the outdoor unit manufacturer instructions and specifications.

11. Electrical Installation

These units are designed for a single phase 120 volts, 60 Hz power supply. Wire selection and wiring must be in accordance with the National Electric Code and/or local codes. Unit terminals are designed to accommodate copper or aluminum wiring. If aluminum wiring is used; please observe special precautions relative to sizing, wire connections and corrosion protection.

Fig.11-1 shows the typical electrical connections required for A/C only and heat pump applications.

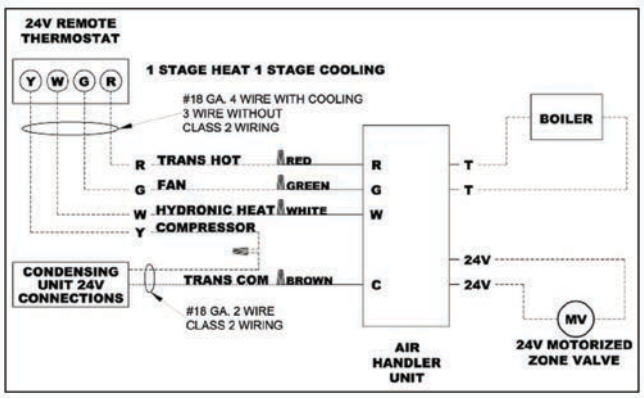

Fig 11-1.

Line voltage wiring should be routed through the access holes at the top of the air handler. Proper electrical conduit connection fittings should be used. Connect the power wiring to the line side connections on the air handler. The electrical ground wire should be connected to the grounding lug. Ensure both the field supplied ground wire and air handler GREEN ground wire are both secured to the grounding lug of the air handler (Fig 11-2).

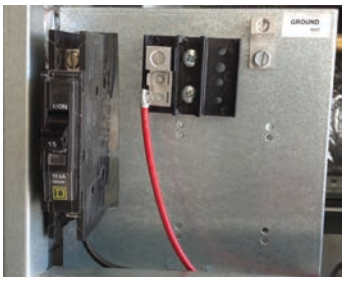

Fig 11-2.

11A. Single Stage Cooling

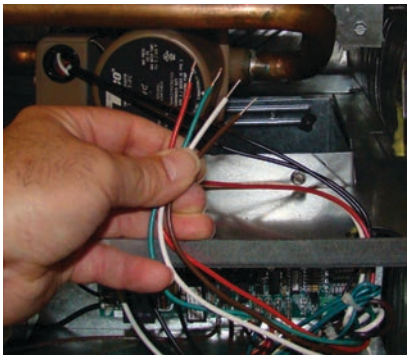

Fig 11A-2.

During cooling mode operation, indoor blower wire “G” will energize a time delay relay located on the control board inside the air handler. After a short time delay period, the time delay relay will apply 120VAC to the motor via the “MTR“ terminal. (See Schematic Fig 22-1.) Fan time delay periods are 30 seconds ON delay and 120 seconds OFF delay.

The Y wire from the thermostat is not connected at the air handler. This wire goes directly to the outdoor unit 24 volt wiring to turn on the outdoor condensing unit when a call for cooling takes place. The 24 volt common for the outdoor unit circuitry is connected at the air handler brown wire. (See Fig11-1.)

The hydronic heater low voltage wiring terminal “W” is wired directly from the thermostat to the air handler. The indoor blower, on a call for heat, will ON delay for a period of 5 seconds. When the call for heat has been satisfied, the indoor blower will have an OFF delay time period of 60 seconds.

Operating CFM based upon each speed tap number is shown on the electrical wiring diagram of the unit. Final air volume adjustments should be made by referencing total external static pressure (Table 11A-1).

MODEL	SPEED TAP	MOTOR AMP	CFM V. EXTERNAL STATIC PRESSURE				
			0.10	0.20	0.30	0.40	0.50
23/24	LOW	2.8	780	740	700	650	580
	HIGH		850	800	740	690	620
35/36	LOW	5.4	1000	980	920	870	800
	HIGH		1210	1190	1160	1130	1070
47/48/60	HIGH	9.5	1360	1340	1310	1280	1230
	MED		1530	1470	1420	1360	1310
	LOW		1730	1670	1600	1540	1480

Table 11A-1.

11B. Jumper Placement

The unit ships with a micro-processor based board which controls the electrical functioning of the unit. An inspection of the controls is recommended prior to startup.

Fig.11-B2 provides a schematic of the control board present in the unit. The unit ships from the factory with the aquastat jumper in the OFF position (right two pins) and the heating selector in the HW position (right two pins). If an aquastat is used in the application; the jumper should be changed to the ON position (left two pins).

Note: Terminals T and N located on the top right side of the board are not intended for field use and should be left disconnected.

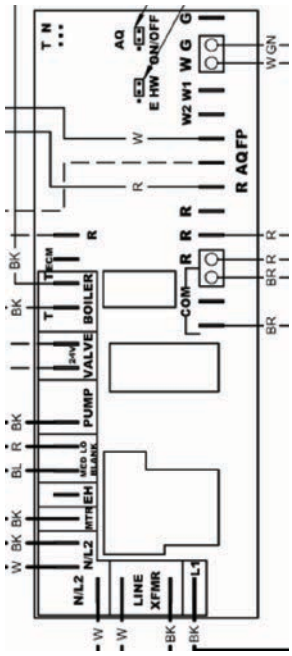

Fig 11B-2.

CAUTION **The aquastat (AQ) jumper must be in the OFF position at all times, except for when an aquastat is used. If the jumper is moved to the ON position without installing an aquastat, the blower will not be energized.**

11C. Pump/Valve/Boiler Wiring

On units shipped from the factory with a pump installed (Fig 11C-3), the pump will be energized on a call for heat.



Fig 11C-3.

On units that were shipped without factory installed pumps, two black wires should be connected to the terminals marked “BOILER” T T (see Fig 11B-2). In applications where a boiler provides the hot water supply, these wires should be connected to the boiler control wiring. Terminals “BOILER” T T are normally open dry contacts.

In applications where a valve or pump is used to regulate the hot water supply, the two black wires located on the “BOILER” T T terminals should be removed and placed on the two terminals marked “VALVE”. These wires should be connected to a 24V valve or pump relay according to local requirements and instructions of the valve or relay manufacturer.

On a call for heat, 24V will be sent to the field-installed valve or pump relay, the valve will open or pump relay will close contacts allowing the pump to run. Water will circulate through the water (hydronic) coil for 60 seconds prior to energizing the blower. After the thermostat is satisfied, the blower will continue to stay energized for a minimum of 30 seconds. The additional blower run time helps maximize heating efficiency.

11D. Freeze Protection Sensor Wiring

The freeze protection sensor is connected to the “FP” and “R“ terminals. This sensor is normally open and will close when the sensor detects a temperature of less than 40ºF. The pump will operate and stay ON for a minimum of 30 seconds.
The board has a built-in timer which circulates hot water 6 times a day for 60 seconds to prevent the hydronic coil from freezing.

12. Condensate Drain

1. Select desired condensate drain openings according to air handler orientation. Both Primary and Secondary outlets can be used.
2. Pipe condensate system using proper PVC fittings.

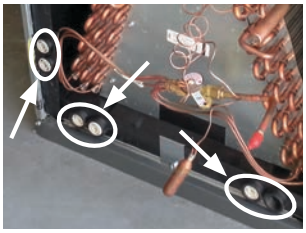

3. Ensure a minimum 2” trap is installed in the condensate drain. Locate the trap near to the connection opening on the air handler. See illustration.

13. Air Volume Adjustment

Air volume needs to be set to the level recommended by the outdoor unit equipment manufacturer. Most systems will require around 400 CFM of indoor air for every 1 ton of system cooling capacity. The air volume must be set prior to attempting system charge.

This air handler uses a PSC type motor. The speed of this motor is set by placing the appropriate winding lead wire on the “MTR” terminal of the control board. Unused motor winding leads are to be placed on the “BLANK” terminals on the control board. The air volume level produced by the air handlers at varying external static pressure levels is shown in Table 13-1.

MODEL	SPEED TAP	MOTOR AMP	CFM V. EXTERNAL STATIC PRESSURE				
			0.10	0.20	0.30	0.40	0.50
23/24	LOW	2.8	780	740	700	650	580
	HIGH		850	800	740	690	620
35/36	LOW	5.4	1000	980	920	870	800
	HIGH		1210	1190	1160	1130	1070
47/48/60	HIGH	9.5	1360	1340	1310	1280	1230
	MED		1530	1470	1420	1360	1310
	LOW		1730	1670	1600	1540	1480

Table 13-1.

Use a Magnehelic Gauge with a 1” scale and two static pressure tips to measure the static pressure during the air volume adjustment procedure (Fig. 13-1). The high port static pressure tip should be placed in the supply duct near the outlet of the air handler. The low port static pressure tip should be placed in the return air duct near the entrance to the air handler. The factory provided air filter should be in place inside of the air handler.

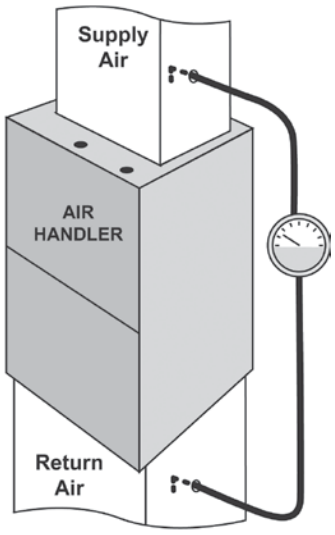

Fig. 13-1

1. Select a speed tap from the CFM table and connect appropriate motor lead wire to the “MTR“ terminal on the control board.

2. Call for fan only operation at the thermostat.

3. Read the external static pressure level on the Magnehelic gauge.

4. Make speed tap selection change to get the air volume as close as possible to the required level.

5. If the static pressure is above .5” wc, excessive turbulence or duct friction needs to be reduced. (Obstructions in the duct system can also cause excessive static pressure.)

6. When proper air volume is established, move on to the charging procedure.

14. System Charging

CAUTION An improperly charged system may cause degradation in system performance and damage the compressor. After installation of the coil, refer to the outdoor unit manufacturer for charging techniques and amount of charge. If outdoor unit manufacturers charging instructions are unavailable, then refer to instructions below to charge the system.

1. Bring airflow up to the maximum CFM possible according to Table 12-1.

2. Evacuate refrigeration system to micron level required by outdoor unit manufacturer.

3. Release system charge from outdoor unit and call for cooling.

4. Use outdoor unit equipment manufacturer specific charging charts if available and make proper charge adjustment based upon outdoor unit instructions.

5. If outdoor unit instructions and charts are not available, use HCI provided charts. Make certain indoor air temperature is near comfort level setpoint of 75°F prior to establishing superheat and subcooling levels.

15A . Flowrator Coils

Add refrigerant until the superheat measured at the outdoor unit suction/vapor line matches the superheat from the chart below.

Outdoor Temp	Superheat		
°F D.B.	Min	Nom	Max
65	30	35	40
70	26	30	34
75	21	25	29
80	17	20	23
85	12	15	18
90	8	10	12
95	4	5	7
100			

Table 15B-1.

15B . Expansion Valve Coils

Add refrigerant until the subcooling measured at the outdoor unit liquid line matches the subcooling recommendation of the outdoor manufacturer. If chart is unavailable charge the unit to a subcooling value of 8ºF +/- 1ºF.

15. Adjustment Of Heat Anticipator

After all connections are made, start-up and checkout must be performed before proper evaluation of the entire system can be made. Make sure that heat anticipator is properly set as noted on thermostat instructions. Load requirements can vary in each residence and it may be necessary for the installer or homeowner to make slight adjustments to the heat anticipator setting for longer or shorter cycles. It is recommended to change the setting no more than plus or minus 0.05 amps at a time. Greater changes can cause the unit to rapid cycle or remain on excessively.

16. Start-Up

WARNING **The hot water (hydronic) coil and all water lines MUST be purged of air prior to starting the pump. Failure to do so could result in pump damage. HCI will not be responsible for any property or personnel damage caused by failure to fol-low this instruction.**

WARNING **Hot water flowing to the coil should be in the range of 120º - 180º F. Water at these temperatures can cause first-degree burns. Use of proper safety gear while installing or servicing the equipment is strongly recommended as is installation of a water-tempering valve (for water temperatures of above 140ºF) to supply lower temperature water to fixtures in the house. N170L series or equivalent should be used.**

WARNING **Installer MUST open water lines and run system to a.) ensure pump is primed and waterflow is constant and b.) ensure there are no leaks in the coils, connections, and/or water piping. Failure to do so could result in water leaks and property damage. HCI will not be responsible for any damage caused by failure to follow this instruction.**

Connect the hydronic coil to the water heater system as shown in Fig 16-1 and 16-2. Use flexible piping and insulate all pipes. Plumbing must be in compliance with state or local codes (Code CMR248 in Massachusetts). The units for hydronic heat have different top and heater box configurations. This configuration is not suitable for electric heat. DO NOT try to install hydronic heater in a unit not equipped for it. Verify connections: hot water to “in” and cold water to “out”. 7/8” OD stubs are provided for plumbing connections. Bleed the air flow system through the bleeder port or optional valve.

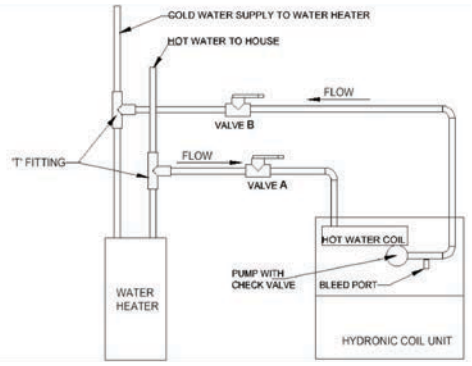

Fig 16-1.

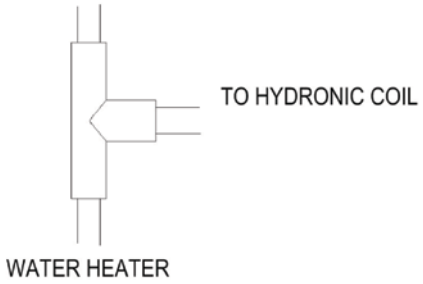

Fig 16-2.

Purging The System

1. Open air vent and allow water heater to fill with water. Close air vent when water heater is full and all air has been purged.

2. Ignite water heater. Set thermostat on water heater to 140 degrees.

3. Close the valve on the hot water supply from the water heater (“A”) and open the valve on the cold water return to the water heater (“B”). Then open the air vent in the fan coil. Use bucket or hose to discard water during purging process at air bleed valve. Purge air completely from line.

4. Once air is purged, close return valve (“B”) and open supply valve (“A”). Purge the coil and lines of air completely.

5. After air is purged from the system and filled with water, open the return valve (“B”). Then close the air vent in the fan coil.

6. Apply power to the fan coil and set the room thermostat on heat. Raise the temperature setting to activate the circulating pump

7. Check the pump to ensure proper operation. The water inlet of the unit should be hot if the water temperature in the water heater has reached the set point. If water is not being circulated through the coil but the pump is running, then open the air bleed valve in the unit and purge any air left in the system.

8. Adjust the water heater thermostat so that the water temperature entering the hot water coils is 120 – 180ºF depending on the amount of heat required by the structure. This is done with the unit energized and operating long enough for all temperatures to stabilize.

After all connections are made, start-up and check-out must be performed before proper evaluation of the entire system can be made. Make sure that heat anticipator is properly set as noted on thermostat instructions.

Load requirements can vary in each residence and it may be necessary for the installer or homeowner to make slight adjustments to the heat anticipator setting for longer or shorter cycles. It is recommended to change the setting no more than plus or minus 0.05 amps at a time. Greater changes can cause the unit to rapid cycle or remain on excessively. To properly check the unit's operation, the installer should have an electrical current measuring device (0-10 amp Amprobe, Fluke), air pressure measuring device (0-1.0 in slope gauge), and a temperature-measuring device (0-200ºF thermometer).

Install the Amprobe to measure blower current, the slope gauge to measure static air pressure at the units and the temperature device to measure unit supply and return air temperature. Before taking measurements, be sure that all registers, grilles and dampers are open or are set to their proper positions. Be sure that clean filters are in place. Temperature measuring device must be installed to obtain average temperature at both inlet and outlet. For outlet, measure temperature of each main trunk at a location far enough away to avoid heater radiation and read the average temperatures. Table 16-1 below shows the CFM that should be achieved at various external static pressures.

MODEL	SPEED TAP	MOTOR AMP	CFM V. EXTERNAL STATIC PRESSURE				
			0.10	0.20	0.30	0.40	0.50
23/24	LOW	2.8	780	740	700	650	580
	HIGH		850	800	740	690	620
35/36	LOW	5.4	1000	980	920	870	800
	HIGH		1210	1190	1160	1130	1070
47/48/60	HIGH	9.5	1360	1340	1310	1280	1230
	MED		1530	1470	1420	1360	1310
	LOW		1730	1670	1600	1540	1480

Table 16-1. - CFM Delivered at Various External Statics

17. Checking Air Flow/Temperature Rise Method

Turn on power supply. Set thermostat fan switch to on. Set the cooling indicator to maximum, heating to minimum. System switch may be on heat or cool. Check slope gauge measurement against appropriate air flow chart. Make damper, register and motor speed adjustments to obtain required airflow.

Set thermostat fan switch to auto, system to heat and thermostat heating indicator to maximum heat. Blower should start and all heat be energized.

Check air flow using temperature rise method.

$$CFM = \frac{OUTPUT(BTUH)}{1.08 \bullet TEMP.RISE}$$

Note: BTUH output should be computed by 500 x Gallons Per Minutes x System Temperature Change = BTUH OUTPUT.

18. Operation and Maintenance

Below are brief descriptions of the key components of the unit and installation. This manual only provides general idea of the components and recommended practices. The installer should use best judgement to ensure safe installation and operation of the unit.

1. Room Thermostat- This is the device that controls that operation of your heating and/or cooling unit. It senses the indoor temperature and signals the equipment to start or stop maintaining the temperature you have selected for your comfort. The room thermostat should be in a central, draft free inside wall location for best operation. Do not place any heat producing apparatus such as lights, radio, etc., near the thermostat as this will cause erratic operation of the comfort system. The thermostat can accumulate dust or lint which can affect its accuracy. It should be cleaned annually.

2. Air Filter(s) - All central air moving comfort systems must include air filter(s). These filters will be located either in the equipment or in the return air duct system upstream of the equipment. The filter(s) removes dust and debris from the air thus helping to keep your air-conditioned space clean. More important, the filter keeps dust and debris from collecting on the heat transfer surfaces thus maintaining optimum equipment efficiency and performance. Inspect and clean or replace filters every month. This routine maintenance procedure will pay big dividends in reduced operating cost and reduced service expense. Never operate comfort equipment without filter(s).

3. Fuses and/or Circuit Breakers- This comfort equipment should be connected to the building electric service in accordance with local and National Electric codes. This electrical connection will include over-current protection in the form of circuit breakers. Have your contractor identify the circuits and the location of over-current protection so that you will be in a position to make inspections or replacements in the event the equipment fails to operate.

WARNING **4. a) Do not store combustible materials or use gasoline or other flammable liquids or vapors in the vicinity of this appliance.**
b) Do not operate the comfort equipment with panels removed.
c) Have your contractor point out and identify the various cut-off devices, switches, etc., that serve your comfort equipment. There is a main switch that will cut off energy to your heating system. Know where they are so that you may cut off the flow of energy in the event of overheating.

5. Periodic Checkup and Service- This product is designed to provide many years of dependable, trouble-free comfort when properly maintained. Proper maintenance will consist of annual check-ups and cleaning of the internal electrical and heat transfer components by a qualified service technician. Failure to provide periodic checkup and cleaning can result in excessive operating cost and/or equipment malfunction.

6. Lubrication- Direct drive blower motors are equipped with permanently lubricated bearings and do not require further lubrication.

7. Air filter replacement: An air filter can restrict the airflow of air to the fan coil if it is not cleaned or replaced periodically. When replacing the air filter, always replace with the same type and size as originally furnished with the unit.

19. HWCGxxTOA Hydronic Related General Information

1. Equipment Sizing Select an air handler with a heating output that exceeds the space heating loss of the structure and that has a cooling coil sized to match the outdoor condensing unit. Note: The heating output of the air handler or hot water coil will not be greater than the output of the selected hot water heater. Therefore, if the water heater is undersized the heating BTUH of the air handler will be LESS than its rated output.

2. Water Heater Selection
The following sizing information should only be used as a basic guide to adequate water heater sizing because of variations in each family's domestic hot water requirements. For additional assistance in water heater sizing contact a professional engineer. Proper water heater sizing should consider both the gallon capacity AND the BTU input of the water heater.

a. To determine water heater GALLON CAPACITY: A minimum 40-gallon high recovery and/or high efficiency gas or oil-fired water heater is recommended. The following volume-sizing guide is satisfactory in most areas of the country (Table 19-1).

CFM	Min Water Heater
600-800	40 gal
1000-1200	50 gal
1400-1600	2x40 gallons piped together
	High input 50 gallons (63-75k Btu)
	72-75gallons
2000	105k Btu

Table 19-1.

b. To determine water heater BTU INPUT (assumes a water heater recovery efficiency of 76%): For mild climates: BTU INPUT=structure's heat loss x 1.51. For colder climates: BTU INPUT=structure's heat loss x 1.58.

3. Pump Replacement
a. Disconnect electrical power to the unit before servicing.
b. Remove access door to reveal pump. Close supply valve ("A") and return valve ("B"). Open the air bleed valve to de-pressurize the system and drain water.
c. Remove the metal pump housing by loosening the four screws on the pump. DO NOT UN-SOLDER PUMP.
d. Replace the new pump housing assembly and reconnect components to the pump. Before assembling, make sure that the runner on the o-ring is in place on the pump housing.
e. Purge the system of the air as described earlier and re-connect the electrical power.

20. Common Problems and Solutions

1. Noisy Pump
System may not be totally purged of air. Purge the system again as described in the start up section above.

2. T&P valve on water heater weeps This normally occurs when a backflow preventer has been installed in the cold water supply line to the water heater. An expansion tank may be necessary to correct this problem. Please contact a qualified plumbing professional for assistance.

3. Hot water is circulating through the water coil during cooling cycle The check valve may be stuck open and allowing hot water to circulate through the coil.

4. Little or no heat from water coil.
a. Purge the system.
b. The inlet connections may be reversed at the fan coil.
c. Water heater thermostat is not set at proper temp.
d. Water heater thermostat is not calibrated.
e. Dip tube in the water heater may not be installed correctly or could be restricted.
f. Look for restrictions in heating system from water heater to fan coil. Some water heaters are supplier with check valves, remove any extra check valves except for the one supplied with the fan coil.
g. The air handler is undersized for space being heated.
h. Water heater is undersized.

Note: All units installed in Massachusetts are required to be in compliance with CMR 248 Massachusetts State Plumbing Code and/or Massachusetts Fuel Gas Code.

These codes require the use of an optional pump timer to circulate the hydronic loop independent of the thermostat.

21. Final System Checkout

1. Make certain all cabinet openings are properly sealed and any grommets moved during installation are moved into proper place.

2. With cooling system operating, check for condensate leakage.

3. Perform leak detection inspection of refrigerant circuit and connecting piping.

4. Secure all cabinet doors

22. Wiring diagram for HWCGxxT0A models

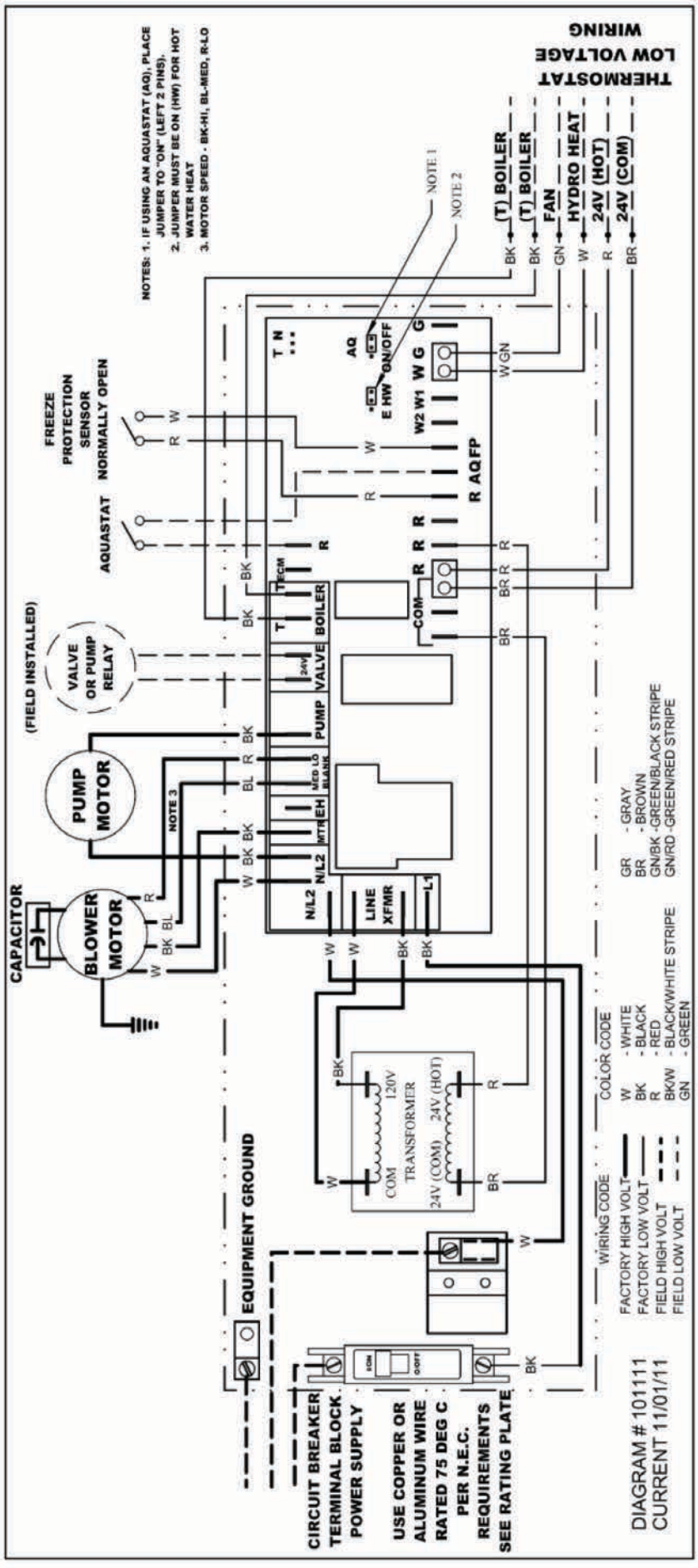

Fig 21-1.

HIGH VOLTAGE disconnect all power sources prior to servicing. Failure might lead to safety hazard

23. Massachusetts Applicable Installation Diagram

